CATTARAUGUS COUNTY HEALTH DEPARTMENT

1 Leo Moss Drive, Olean, NY 14760, Tel. (716)701-3386, Fax (716) 701-3737

Public Health
Prevent. Promote. Protect.
Cattaraugus County Health Department
Established 1923

Kevin D. Watkins, M.D., MPH, *Public Health Director*

Robert W. Ring, PE
Environmental Health Director

Date: 11/6/2026

NOTICE TO BIDDERS

Bid Proposal for Abatement of Lead-Based Paint Hazards in Residential Housing
HUD Lead Hazard Reduction Capacity Building Grant Program
Project No: NYLCB0008-23

Grant Recipient (owner): Jeramy O'Hanner

Project Address: 17 Pine Street, Franklinville, Village Tax ID: 40.063-4-11.1

Background:

The Cattaraugus County Health Department are seeking bids for abatement of lead-based paint hazards at the above-mentioned address. This is a residential rehabilitation project which requires that lead-safe work practices are followed. Contactors, employees, and subcontractors must be EPA certified to perform lead abatement in order to be awarded the project.

The scope of work is outlined in the following plans and specifications and includes various trades including demo, painting, millwork, installation of windows, doors, floors, topsoil/seed and other residential rehabilitation work.

Prebid Meeting and Walkthrough:

A project walkthrough at the above-mentioned project address will be held on **Tuesday, November 17th, 2026 at 12:00 PM.**

Bid Proposals:

Bids may be emailed to rwring@cattco.org or mailed to the Cattaraugus County Health Department at the address below by **Wednesday, November 25th at 3:00PM**. A bid includes a completed: (a) Itemized Proposal; (b) Non-Collusive Bidding Certificate; (c) Legal Status Information form; (d) Executive Order 14 and Executive Order 16 form; A signature is required on all four (4) documents. Incomplete bids will not be considered.

ATTN: Robert Ring, Cattaraugus County Health Department,
1 Leo Moss Drive,
Olean, NY 14760

Questions:

Questions about this bid may be directed to Robert Ring by email at rwring@cattco.org or by phone at (716) 904-3782.

Under this grant program, CCHD reserves the right to reject any and all proposals, to waive technicalities, or re-bid if the best interest of the client will be served thereby.

TABLE OF CONTENTS

Bid Addendum Form.....

Instructions to Bidders .....

Insurance Requirements .....

General Bid Specifications.....

Project Plans .....

Special Bid Specifications .....

Itemized Proposal …….

Non-Collusive Bidding Certification .....

Legal Status Information.....

Executive Order 14 and Executive Order 16 Certification .....

Sample Change Order Form .....

CATTARAUGUS COUNTY HEALTH DEPARTMENT

1 Leo Moss Drive, Olean, NY 14760, Tel. (716)701-3386, Fax (716)701-3737

Public Health
Prevent. Promote. Protect.
Cattaraugus County Health Department
Established 1923

Kevin D. Watkins, M.D., MPH, *Public Health Director*

Robert W. Ring, PE
Environmental Health Director

ACKNOWLEDGMENT OF RECEIPT OF ADDENDA

The undersigned acknowledges receipt of the following addenda to the subject project (if none, state "NONE"):

Addendum No. _____ Dated_____

Addendum No. _____ Dated_____

Addendum No. _____ Dated_____

Addendum No. _____ Dated_____

Addendum No. _____ Dated_____

Receipt is hereby acknowledged for all addenda listed above.

Signature of Bidder _____ Date_____

PHAB Accredited Health Department
Public Health Accreditation Board

INSTRUCTIONS TO BIDDERS

1. **BID FORM**

Bid shall be submitted on these Cattaraugus County bid forms or bid will not be considered. Bid must be typed or printed in ink. Original autograph signatures in ink are required. Facsimile or rubber stamp signatures will not be accepted. All blanks must be filled in with required information or, if a bid item, the designation N/B (no bid).

2. **CHANGES**

Any change in wording or interlineation by a bidder of the inquiry as published by Cattaraugus County shall be reason to reject the proposal of such bidder, or in the event that such change in the Invitation to Bid is not discovered prior to entering into a contract, to void any contract entered into pursuant to such bid.

3. **INFORMALITIES**

The County may consider informal any bid not prepared and submitted in accordance with the provisions hereof and may waive any informalities or reject any and all bids. The contract award will be made to the responsible bidder submitting the lowest acceptable bid. Conditional bids will not be accepted.

4. **BID TIME**

Any bid may be withdrawn prior to the above scheduled time for the opening of bids, or authorized postponement thereof. Any bid received after the time specified shall not be considered.

5. **INVESTIGATIONS**

The County may make such investigations as it deems necessary to determine the ability of the bidder to perform the work, and the bidder shall furnish to the County all such information and data for this purpose as the County may request. The County reserves the right to reject any bid if the evidence submitted by, or investigation of, such bidder fails to satisfy the County that such bidder is properly qualified to carry out the obligations of the contract and to complete the work contemplated therein.

6. **BID ENVELOPE**

Each bid must be submitted in a sealed envelope clearly marked as to contents therein, bearing on the outside the name and address of the bidder. If sent by mail, the sealed envelope containing the bid must be enclosed in another envelope labeled as specified.

7. **NON-COLLUSIVE CERTIFICATION**

Non-collusive bidding certification shall be made by each bidder in the form provided and shall be submitted as a part of the bid. Bids submitted without non-collusive bidding certification will be considered irregular and may be rejected by the County.

8. **CONTRACT AWARD**

Contract(s) or purchase order(s) will be awarded after due consideration of the suitability of goods and/or services bid to satisfy these specifications, the total cost of such goods and/or services including all cost elements, and the timeliness of the agreed delivery date.

9. **EXECUTORY CLAUSE**

This executory clause shall be a part of any agreement entered into pursuant to this bid:

It is understood by the parties that this agreement shall be executory only to the extent of the monies available to the County of Cattaraugus and appropriated therefor, and no liability on account thereof shall be incurred by the County beyond the monies available and appropriated for the purpose thereof.

10. **DELIVERY SCHEDULE**

Failure to meet delivery schedule as per accepted bid may result in legal action by Cattaraugus County to recover damages.

11. **PRICES**

Prices shall be quoted F.O.B. destination, delivered inside and installed, or as otherwise specified in these specifications. "Tailgate delivery" will not be accepted unless specified by the County.

12. **TRANSPORTATION CHARGES**

Collect transportation charges will not be paid by the County. All freight, cartage, rigging, postage or other transportation charges shall be prepaid, unless otherwise stated in the Detailed Specifications herein.

13. **TAXES**

No taxes are to be billed to the County. Bid shall not include any Federal, State, or local excise, sales, transportation, or other tax unless Federal or State law specifically levies such tax on purchases made by a political subdivision. Any applicable taxes from which the County is not exempt shall be listed separately as cost elements, and added into the total net bid.

14. **COMPLIANCE WITH LAWS**

The successful bidder shall comply with all laws, rules, regulations and ordinances of the Federal Government, the State of New York and any other political subdivision or regulatory body which may apply to its performance under this contract.

HAZARD COMMUNICATION. In complying with the above laws, rules and regulations, and pursuant to 12 NYCRR Part 820 and Section 876 of the Labor Law, it is the responsibility of the County to provide the successful bidder with the following information:

(a) the safety data sheets (SDS) for any hazardous chemicals to which employees may be exposed will be made available,

(b) the telephone numbers of plant personnel who are to be contacted in the event of a chemical spill or accident,
and,
(c) emergency procedures in the event of a fire or spill.

SAFETY DATA SHEETS. The successful bidder shall be responsible for the provision of the SDSs to the County prior to introducing hazardous materials onto the site, assuring compliance before work is started, and disseminating any information to County employees concerning significant chemical hazards that the successful bidder is bringing to the County's workplace. The SDSs will be obtained from the successful bidder for all hazardous materials prior to bringing the materials on the site. These SDSs will be maintained by the County as long as those materials are present. It is the responsibility of the successful bidder to train its own employees.

15. **CONTRACT ASSIGNMENTS**

The bidder shall not assign, transfer, sublet, or otherwise dispose of this contract, or of its right, title or interest in the contract, or its power to execute the same, to any other person or corporation without the previous consent, in writing, of the Chairman of the Cattaraugus County Legislature.

16. **CASH DISCOUNT**

Any cash discount which is a part of a bid will be considered as a reduction in the bid prices in determining the award of the bid. Date of invoice must not precede date of delivery. The County policy is to pay all claims in a timely manner within the specified time. However, if for some reason payment is delayed, the County will take the discount when payment is made. If this is unsatisfactory, please quote net. The County will not pay any interest charges.

17. **MANUFACTURERS**

Where required on an individual bid sheet the bidder must specify the trade name of the material on which the price is quoted.

18. **ALTERNATE MANUFACTURERS**

Bid offering material other than that of specified manufacturer or trade name will be considered unless stated otherwise. The use of the name of a particular manufacturer, trade name, or brand in describing an item does not restrict a bidder to that manufacturer or specific article. However, the substituted article on which a proposal is submitted must be of such character or quality that it would serve the purpose for which it is to be used equally as well as the manufacturer or brand specified. Proposals will be accepted in accordance with specifications on file or approved equal.

19. **ALTERNATE ITEMS**

If material or services other than those specified in this bid document are offered, the bidder must so state and furnish at the time of bid opening, if so requested, and as part of his bid the following information in duplicate:

(a) Complete description of the item offered, and detailed explanation of the differences between the item specified and the item offered. If, in the opinion of the Department Head, sufficient detail is not presented as a part of the sealed bid to permit definite evaluation of any substitute item, the bid will not be considered.
(b) Descriptive literature of item offered, for evaluation.
(c) List of installations in Cattaraugus County of the item offered.
(d) List of other installations.

20. **ADDITIONAL INFORMATION**

Any additional information which bidder desires to add to the bid shall be written on a separate sheet of paper, attached to and submitted with the formal sealed bid, to be read at the formal opening.

21. **WORKMANSHIP**

Workmanship must meet with the approval of the department head or heads involved, and shall be first class in every respect without exception and shall be equal to the best modern practices. Materials furnished are to be new and unused. All materials furnished or work performed are to be guaranteed free from defects. Anything found defective or not meeting specifications, no matter in what state of completion may be rejected and shall be made good by the contractor at his own expense.

22. **HOLD HARMLESS**

The successful bidder to whom the bid is awarded shall indemnify and hold harmless Cattaraugus County and its agents and employees from and against all claims, damages, losses or causes of action arising out of or resulting from such vendor's performance pursuant to this bid.

23. **BID VALIDITY**

This bid is firm and irrevocable for a period of 45 days from the date and time of the bid opening. If a contract is not awarded within the 45-day period, a bidder to whom the bid has not been awarded may withdraw his bid by serving written notice of his intention to do so upon the Clerk of the County Legislature. Upon withdrawal of the bid pursuant to this paragraph, the County will forthwith return the bidder's security deposit.

24. **CONTRACT INTEREST**

No official, or employee of the County, who is authorized in such capacity, and on behalf of the County, to negotiate, make, accept or approve or to take part in negotiating, making, accepting, or approving this contract shall become directly or indirectly interested personally in this contract or in any part hereof. No officer or employee of, or for the County, who is authorized in such capacity, and on behalf of the County, to exercise any supervisory, administrative, or other function, in connection with this contract, shall become directly or indirectly interested personally in this contract or any part hereof.

25. **OTHER CUSTOMERS**

Prices charged to Cattaraugus County are to be no higher than those offered to any other governmental or commercial consumer. If a bidder has a New York State or a Federal GSA contract for any of the items covered in this bid or any similar items, he shall so indicate that he has said contract on these bid papers and supply a copy of this contract within 5 days if so requested by the County.

26. **PRICE IS FIRM**

The unit prices bid shall remain firm, and any other charges bid shall also remain firm, for delivery of the equipment, material, work, or services described in this bid with the exception of the asphalt, diesel fuel, kerosene and gasoline bids, which are permitted escalator prices in accordance with the detailed specifications for those products. No cost increase shall be charged for any reason whatsoever.

27. **BIDDER AFFIRMATION**

In executing this bid, the bidder affirms that all of the requirements of the specifications are understood and accepted by the bidder, and that the prices quoted include all required materials and services. The undersigned has checked all of the bid figures, and understands that the County will not be responsible for any errors or omissions on the part of the undersigned in preparing this bid. Mistakes or errors in the estimates, calculations or preparation of the bid shall not be grounds for the withdrawal or correction of the bid or bid security. In case of error in extension of prices in the bid, the unit price will govern.

28. **INSURANCE**

The (Contractor, Vendor, Etc.) shall secure and maintain, at its own cost and expense, insurance coverage specified in Appendix (A) attached hereto, complying with Classification "(selected on form)", with insurance companies licensed in the State of New York. Cattaraugus County must be named as an additional insured for purposes of coverage, but not for payment of premium. The (Contractor, Vendor, Etc.) shall file a certificate of insurance with the Cattaraugus County Risk Manager covering all acts performed by the (Contractor, Vendor, Etc.) prior to performing pursuant to this Agreement or receiving any payment thereunder and shall be responsible for updating the certificate as necessary throughout the term of the Agreement. All certificates of insurance shall provide that Cattaraugus County be given thirty (30) days' notice prior to non-renewal or cancellation of these policies. **Certificate of Insurance shall be furnished by the bidder within five (5) days of the "Intent to Award" and prior to signing of contract.** Failure to supply a satisfactory certificate within five (5) days after the "Intent to Award" may result in the cancellation of award and for the forfeiture of the Contractor's bid security, in the sole discretion of the County.

29. **STATE CONTRACTS**

The County reserves the right to purchase the commodity being bid, from State Contract when it is most beneficial to the County to do so.

30. **LITIGATION**

In the event any litigation shall arise from this contract, the laws of the State of New York shall control any litigation, regardless of which party shall institute such action.

31. **MUNICIPAL EXTENSION**

The contract if awarded will be to the lowest responsive/responsible bidder(s) in part or in whole who meet(s) all the terms of the specifications. The County guarantees no minimum or maximum purchases or contracts as a result of award of this bid. Cattaraugus County reserves the right to allow all municipal and not for profit organizations authorized under the General Municipal Laws of the State of New York, to purchase any goods (materials and equipment) and/or services awarded as a result of this bid in accordance with the latest amendments to NYS GML 100 through 104 and County Law Section 408-a. However, it is understood that the extension of such contracts are at the discretion of the vendor and the vendor is only bound to the contract between Cattaraugus County and the vendor.

APPENDIX "A"
COUNTY OF CATTARAUGUS STANDARD INSURANCE REQUIREMENTS

The insurance companies providing these coverages acknowledge that the Named Insured is entering into a contract with the County of Cattaraugus in which the Named Insured agrees to defend, hold harmless, and indemnify the County, its officials, employees, and agents against all claims resulting from work performed, material handled, and services rendered. In some circumstances it will be necessary to require alternate coverage and limits which will be defined in the bid specifications, contract, lease or agreement. The alternate coverage and limits should be evidenced on the certificate in lieu of the standards printed below.

Minimum Coverage Limits are as Follows:

	A	C	Ca	D	F	G	Ga
	Construction & Maintenance	**Professional**	**Low Risk Professional**	**Property Leased to Others or Use of Facilities**	**Livery**	**All Purpose Public Entity, Concessionaire**	**Low Risk All Purpose Public Entity**
* ** **COMMERCIAL GENERAL LIABILITY**	$2,000,000 Agg. $1,000,000 Occ.	$2,000,000 Agg. $1,000,000 Occ.	$1,000,000 Agg. $ 500,000 Occ.	$2,000,000 Agg. $1,000,000 Occ.	$2,000,000 Agg. $1,000,000 Occ.	$2,000,000 Agg. $1,000,000 Occ.	$1,000,000 Agg. $ 500,000 Occ.
Prem. - Ops.	Include	Include	Include	Include	Include	Include	Include
Prods. - Compl. Ops.	Include	Include	Include	Include	Include	Include	Include
Indep. Contractor	Include	Include	Include	Include	Include	Include	Include
Contractual	Include	Include	Include	Include	Include	Include	Include
BF Property Damage	Include			Include			
X,C,U	Include						
Personal Injury	Include	Include	Include	Include	Include	Include	Include
Liquor Law				Include			
Host Liquor				Include			
** **AUTO LIABILITY**	$1,000,000 CSL	$1,000,000 CSL	$1,000,000 CSL	$1,000,000 CSL	$1,000,000 CSL	$1,000,000 CSL	$1,000,000 CSL
Owned	Include	Include	Include	Include	Include	Include	Include
Hired	Include	Include	Include	Include	Include	Include	Include
Non-Owned	Include	Include	Include	Include	Include	Include	Include
* ** **EXCESS LIABILITY**	$3,000,000	$1,000,000		$1,000,000	$3,000,000	$1,000,000	
WORKERS' COMP.	Statutory or Proof of Exemption	Statutory or Proof of Exemption	Statutory or Proof of Exemption	Statutory or Proof of Exemption	Statutory or Proof of Exemption	Statutory or Proof of Exemption	Statutory or Proof of Exemption
EMPLOYER'S LIABILITY	Unlimited	Unlimited	Unlimited	Unlimited	Unlimited	Unlimited	Unlimited
*** **PROFESSIONAL LIAB.**		$3,000,000 Agg. $1,000,000 Occ.	$1,000,000 Agg. $ 500,000 Occ.				

* The Comprehensive/Commercial General Liability limits can be met by one or more policies, or in combination with an Excess and/or Umbrella Liability policy.
The COI must indicate if the coverage trigger in an 'Occurrence' form or a 'Claims-made' form.
All 'Claims-made' policies shall continue to provide evidence of coverage three (3) years after completion of work or product delivery.
** Cattaraugus County MUST be named as Additional Insured for all acts of Named Insured pursuant to this contract.
*** Professional Liability policies are not required to have the County as Additional Insured

Each policy, as allowed by law, shall be endorsed stating that the contractor's insurers agree to waive any rights of subrogation against the County of Cattaraugus because of payments for any injury or damages arising out of work performed under this contract.

GENERAL BID SPECIFICATIONS

A. Prequalification of Bidders

The County reserves the right to reject any bid if the evidence submitted by, or investigation of, such bidder fails to satisfy the County that such bidder is properly qualified to carry out the obligations of the contract and to complete the work contemplated therein. Conditional bids will not be accepted.

B. Delivery of Proposals

Each proposal may be submitted by email or in a sealed envelope clearly marked with "Bid Proposal for [Project Address] and the HUD Project No: NYLCB0008-23. Proposals must be delivered to the Cattaraugus County Health Department at or before the date, time and location specified. No responsibility shall be attached to the County or their representatives for the premature opening of any proposal not properly labeled. Bidders assume all responsibilities and risks associated with mail or courier delivery. When sent by mail, the sealed proposal must be addressed to the County at the address listed in the Notice to Contractors. Proposals received after the time for opening of bids will not be considered.

C. Questions

Any questions that arise after the project walkthrough must be submitted to Mariel Grey, Environmental Health Sanitarian, for the Cattaraugus County Health Department, via e-mail to mgrey@cattco.org - Bidders must identify who in their organization should receive the answers to the questions. Replies will be issued by addenda emailed or mailed to all parties recorded as having received the bid documents. Questions received less than four (4) business days prior to the date of submission of bids will not be answered. Only questions answered by formal written addenda will be binding.

The Contractor understands and agrees that no pleas of ignorance relating to any data, condition, policies, or requirements of the project's residence, or County, that may exist or that may be reasonably encountered, pursuant to a contract, will be accepted as a reason for failure or omission on the part of the Contractor to fulfill in every respect all contract requirements. Nor will the same be accepted, under any circumstances, as a basis for any type of claim whatsoever for extra charges, start-up costs, or for the rendering of proper service.

The bidder in these specifications will be referred to as the Contractor and the contract will be between the Contractor and the Homeowner, with the County of Cattaraugus being an interested party. A valid contract will exist when, upon award to the successful bidder, a contract has been executed by the Contractor, Homeowner, and County of Cattaraugus.

D. Disqualification of Bidders

Any one or more of the following may be considered as sufficient cause for the disqualification of a bidder and the rejection of his/her proposal.

a. More than one proposal for the same work from an individual, firm or corporation under the same or different names.

b. Evidence of collusion among bidders. Participants in such collusion will receive no recognition as bidders for any future work with the County until any such participant shall have been reinstated as a qualified bidder.

c. Lack of competency and adequate machinery, plant and other equipment, as revealed by the financial statements and experience questionnaire.

d. Unsatisfactory performance record as shown by past work for any owner judged from the standpoint of workmanship and progress.

e. Uncompleted work which, in the judgment of the County, might hinder or prevent the prompt completion of this work if awarded.

f. Failure to pay, or satisfactorily settle, all bills due for labor and materials on former contracts in force at the time of letting.

g. Failure to comply with any qualification regulations of the County.

E. Consideration of Proposals

In accordance with General Municipal Law, after the proposals are opened and read, they will be compared on the basis the current gross summary in a manner hereafter described for which the work will be performed according to the plans and specifications together with the unit price for each of the separate items as called for. The lowest bid shall be determined by the County on the basis of the Total Project Cost for which the entire work will be performed, arrived at by a correct computation of all items specified in the proposal therefore at the unit prices stated in the proposal. If a conflict arises within the bid proposal, then the Written In Words statement will be used for the final tabulation.

The right is reserved to reject any or all proposals, to waive technicalities, to advertise for new proposals, or to proceed to do the work otherwise, if the best interests of the Homeowner and County will be promoted thereby.

F. Cancellation of Award

The County reserves the right to cancel the award of any Contract at any time before the execution of the Contract by all parties without any liability against the County.

G. Failure to Execute Contract

Failure of the Homeowner or Contractor to execute the Agreement within (10) calendar days from the date of the ***Notice of Award*** after he/she has received the Contract form shall be just cause for the annulment of the award. The award may then be made to the next lowest responsible bidder or the work may be re-advertised and constructed under a new Contract or otherwise as the County may decide.

H. Responsibility of the Contractor

The Contractor will be held responsible for the execution of a satisfactory and complete piece of work, in accordance with the true intent of the drawings and specifications. He/She shall provide, without extra charge, all incidental items required as a part of his work, even though not particularly specified or indicated. If he/she has good reason for objecting to the use of any material, appliance, or method of construction as shown or specified, then he/she shall report such objections to the Risk Assessor, and if approved, shall obtain proper adjustment before the Contract is made, and then shall proceed with the work with the understanding that a satisfactory job will be required. The Contractor is solely responsible for site safety of the site and adherence to EPA and OSHA regulations. All work must be completed in the manner described in the HUD Guidelines for the Evaluation and Control of Lead-based Paint in Housing, unless otherwise specified.

The Contractor must be an EPA Certified Firm and employ trained supervisors and workers who are additionally EPA certified. At least one Supervisor certified in lead abatement must directly supervise and monitor the work.

Pursuant to Article 36 – Protection of Underground Facilities of the NYS General Business Law, the Contractor certifies that its excavator(s), operator(s), and/or subcontractor(s), if any, are informed of their responsibilities under the law and regulations to protect underground

facilities and the existence, operation and programs of the One-Call Notification System. The Contractor shall require the excavator(s), operator(s), and/or subcontractor(s), if any, to have completed the training and education program provided by the One-Call Notification System pursuant to this section.

I. Control of Work

The Homeowner and County will be represented by a County Risk Assessor who will observe the work done under the Contract on a part time basis throughout construction.

The Risk Assessor shall inspect work performed, review materials to be used, and stop and reject work and materials found to be not in accordance with the plans and specifications. His/Her authority shall cover all phases of the work. In the event that questions should arise concerning the interpretation or changes of plans and specifications or to the acceptability of the work, the Contractor shall submit his/her question, in writing, to the Risk Assessor. Their authority shall consist of observing the work under the Contract, rejecting any defective material used and temporarily suspending any work improperly performed. They will not have any authority to make changes or alterations in the plans and specifications, nor be permitted to act as foremen for the Contractor.

Any work done or materials used without scheduling suitable observation by the Risk Assessor or his/her
authorized representative as noted may be ordered removed and replaced at the Contractor's expense.

J. Guarantee of Materials and Workmanship

The Work performed under this Agreement shall be done in a good and workmanlike manner according to the best industry practices. All materials shall be new and conform to the Contract.

The Contractor does hereby guarantee all materials and workmanship supplied under this contract to be of a quality meeting the standards current in the New York State Uniform Building Code and shall correct any defect or deficiency that may occur or become evident during the period of 12 months from and after the date of execution of the Certificate of Final Inspection.

Any damage to building, grounds, structures or property that is a result of the construction work performed by the Contractor will also be corrected by the Contractor at no cost to the Homeowner, or the County. The Contractor shall furnish the Owner with all manufacturers and suppliers written guarantees and warranties covering materials and equipment under this contract.

K. Protection of Persons and Property

The Contractor shall exercise proper precautions at all times for the protection of persons and property, either on or off the site, which occur as a result of performance of the Work.

The Contractor shall keep the premises broom clean and orderly on a daily basis during the course of the construction and, if the house is occupied, the Contractor shall make every effort to minimize disruption of the occupant's daily routine.

The Contractor shall remove all debris prior to Final Payment. Unless otherwise agreed, all materials and equipment that have been removed as part of the Work shall belong to the Contractor and he/she shall be responsible for their proper disposal.

The Contractor shall take or have taken any and all necessary precautions to comply with applicable New York State and Federal Department of Labor employee safety requirements.

L. Resolution of Disputes

The County, acting as an interested third party, is responsible for ensuring proper implementation of the Contract. In the event there is any question or dispute in respect to the interpretation or the manner of implementation of this Contract or related documents or relating to the execution, progress and completion of the work, the Homeowner and Contractor agree to resolve disputes. All parties sign a Certificate of Final Inspection form indicating they are satisfied

with completion of the Contract. Resolution of any disputes arising during the one-year period of guarantee, are the responsibility of the Homeowner and the Contractor.

M. Acceptance and Final Payment

When in the opinion of the Risk Assessor the Contractor has substantially completed the project or a specified area of a project so that the resident can re-occupy or utilize the project for the use it was intended, the Risk Assessor will issue a Certificate of Completion and a Lead Clearance Report.

When in the opinion of the Risk Assessor the Contractor has fully performed the work under the Contract, the Risk Assessor shall recommend acceptance of the work so completed. He/she shall notify the Contractor by letter of such acceptance, and copies of such acceptance shall be sent to other interested parties.

N. General Guarantee

Neither the final certificate of payment nor any provision in the contract documents nor partial or entire occupancy of the premises by the Homeowner shall constitute acceptance of work not done in accordance with the contract documents or relieve the Contractor of liability in respect to any express warranties or responsibility for faulty materials or workmanship.

The Contractor shall remedy any defects in the work and pay for any damage to other work resulting there from, which shall appear within a period of one (1) year from the issuance of the Certificate of Completion. The County will give notice of observed defects with reasonable promptness.

O. Cooperation with Utilities

It shall be the Contractor's duty to notify all utility companies or other parties affected within a time frame as not to affect the schedule prior to all necessary adjustment of the public or private utility fixtures and other appurtenances within or adjacent to the limits of construction. The Contractor shall notify the Risk Assessor in writing describing the need for, and extent of, utility adjustments and the anticipated schedule.

It is understood and agreed upon that the Contractor has considered in his/her bid all of the permanent and temporary utility appurtenances in their present or relocated positions as shown on the plans and that no additional compensation will be allowed for any delays, inconveniences, or damage sustained by him due to any interference from the utility appurtenances or the operation of moving them by the utility owners. The Contractor will be responsible for any fees required by the utility owners for temporary locations.

P. Permitting

It is the responsibility of the Contractor to obtain all necessary building permits, environmental permits or any other permits required to complete the work, at their cost. The Contractor is responsible for holding all certifications, necessary to complete the work as described.

Q. Responsibility for Damage Claims

The Contractor shall indemnify and save harmless the Homeowner and County from all suits, actions, or claims of any character brought because of any injuries or damage received or sustained by any person, persons, or property on account of the operations or workmanship of the Contractor; or on account of or in consequence of any neglect in safeguarding the work; or through use of unacceptable materials in constructing the work; or because of any act or omission, neglect, or misconduct of the Contractor; or because of any claims or amounts recovered from any infringements of patent, trademark, or copyright; or from any claims on amounts arising or recovered under the Workers' Compensation Law, or any other law, ordinance, order, or decree; and so much of the money due the Contractor under and by virtue of

his/her Contract as shall be considered necessary by the County for such purpose, may be retained for the use of the County; or, in case no money is due, his/her surety may be held until such suit or suits, action or actions, claim or claims for injuries or damages as aforesaid shall have been settled and suitable evidence to that effect furnished to the County; except that money due the Contractor will not be withheld when the Contractor produces satisfactory evidence that he/she is adequately protected by public liability and property damage insurance.

The Contractor agrees to make no claim for damages for delay in the performance of this contract occasioned by any act or omission to act of the Homeowner or County, or any of its representatives, and the Contractor agrees that any such claim shall be fully compensated for by an extension of time to complete the performance of work as provided herein.

R. No Waiver of Legal Rights

The County shall not be precluded or stopped by a measurement, estimate or certificate made either before or after the completion and acceptance of the work and payment therefore, from showing the true amount and character of the work performed and materials furnished by the Contractor, nor from showing that any such measurement, from recovering from the Contractor or his/her sureties, or both, such damage as it may sustain by reason of his/her failure to comply with the terms of the Contract. Neither the acceptance by the County, or any representative of the County, nor any extension of time, nor any possession taken by the County shall operate as a waiver of any portion of the Contract or of any power herein reserved, or of any right to damages. A waiver of any breach of the Contract shall not be held to be a waiver of any other or subsequent breach.

S. Insurance and Licensing

The Contractor shall procure and maintain at its own expense and without expense to the County, until final acceptance by the County, of the work covered by the contract, insurance for liability for damages imposed by law, of the kinds and in the amounts hereinafter provided, with insurance companies authorized to do such business in the County covering all operations under the contract whether performed by it or its subcontractors, as listed under the "County of Cattaraugus Standard Insurance Requirements", in the "Insurance Requirements" portion of this bid package. The (Contractor, Vendor, Etc.) shall file a certificate of insurance with the Cattaraugus County Risk Manager covering all acts performed by the (Contractor, Vendor, Etc.) prior to performing pursuant to this Agreement or receiving any payment thereunder and shall be responsible for updating the certificate as necessary throughout the term of the Agreement. All certificates of insurance shall provide that Cattaraugus County be given thirty (30) days' notice prior to non-renewal or cancellation of these policies. Certificate of Insurance shall be furnished by the bidder within five (5) days of the "Intent to Award" and prior to signing of contract. Failure to supply a satisfactory certificate within five (5) days after the "Intent to Award" may result in the cancellation of award and for the forfeiture of the Contractor's bid security, in the sole discretion of the County. The types of insurance are as follows:

a. Workers' Compensation Insurance. A policy covering the obligations of the Contractor in accordance with the provisions of the Workers' Compensation Law, covering all operations under the contract, whether performed by it or its subcontractor and also under the Disability Benefits Law. The contract, shall be void and of no effect unless the person or corporation making or executing same shall secure compensation and disability benefits coverage for the benefit of, and keep insured during the life of the contract, such employees in compliance with the provisions of the Workers' Compensation Law.

b. Liability and Property Damage Insurance. Policies following the 1986 Insurance Services Office formats shall be provided. Unless otherwise specifically required by special provision, each policy shall not be amended or contain deductible clauses or coverage exclusions of any nature and shall have limits not less than shown on the sample Certificate of Liability Insurance (Column A – Construction & Maintenance) on page D-11.

In addition to such coverage required under the "County of Cattaraugus Standard Insurance Requirements", Contractor shall also provide the following coverage for all damages arising during the policy period, shall be furnished in the types as described below. An umbrella type policy, dedicated to this contract, may be used to meet these limits.

i. Contractor's Liability Insurance issued to and covering the liability for damages imposed by law upon the Contractor with respect to all work performed by him under the agreement;

ii. Contractor's Liability Insurance issued to and covering the liability for damages imposed by law upon EACH SUBCONTRACTOR with respect to all work performed by said subcontractor under the agreement;

iii. Contractor's Protective Liability Insurance issued to and covering the liability for damages imposed by law upon the Contractor with respect to all work under the agreement performed for the Contractor by subcontractors;

iv. Completed Operations' Liability Insurance issued to and covering the liability for damages imposed by law upon the Contractor and each subcontractor arising between the date of final cessation of the work and the date of final acceptance thereof, out of that part of the work performed by each;

v. Protective Liability Insurance issued to and covering the liability for damages imposed by law upon Cattaraugus County and the Cattaraugus County Health Department, all other County Departments, and all employees of the County both officially and personally, any municipality in which the work is being performed, and/or any public benefit corporation, railroad, or public utility whose property or facilities are affected by the work or any consultant inspecting engineer or inspector working for or on the project, and their agents or employees, with respect to all operations under the agreement by the Contractor or its subcontractors, including omissions and supervisory acts of the State, municipality, public benefit corporation or consultant. Specifically, this includes, but is not necessarily limited to the parties.

   a. Failure to list a firm, organization or municipality, etc., does not eliminate the requirement to provide such coverage.
   b. If the Contractor elects to use the same policy for more than one project, then it must provide with the insurance certificate the Aggregate Limits of Insurance (per project) Endorsement indicating the specific project site and contract number;

vi. Commercial General Liability (Premises, Existence, Hazard) Liability Insurance (formerly called Owner's, Landlord's and Tenant's Liability Insurance) issued to and covering the liability for damages imposed by law upon Cattaraugus County and the Commissioner of Public Works and all employees of the County both officially and personally, any municipality in which the work is being performed, and/or any public benefit corporation, railroad, or public utility whose property or facilities are affected by the work or any consultant inspecting engineer or inspector working for or on the project, and their agents or employees, with respect to temporarily opening any portion of the County construction project under this agreement, until the construction or reconstruction pursuant to the agreement has been accepted by the County. Specifically, this includes, but is not necessarily limited to the parties listed on page D-11 (Column A – Construction & Maintenance).

   a. Failure to list a firm, organization or municipality, etc. does not eliminate the requirement to provide such coverage. This coverage will not be required for contracts involving only turf establishment, landscaping, or traffic signals, which do not involve work on the roadway.

vii. Automobile Liability and Property Damage Insurance. A policy covering the use in connection with the work covered by the Contract Documents of all owned, non-owned and hired vehicles bearing, or, under the circumstances under which they are being used, required by the Motor Vehicle Laws of the State of New York to bear license plates." List of Additional Insured Parties County of Cattaraugus, 303 Court Street, Little Valley, NY 14755.

T. Federal Statutes and Other Provisions

The Contractor agrees to comply and conform with all applicable equal employment opportunity laws as mandated by the U.S. Government. It is specifically agreed as part of the consideration for the Homeowners that the Contractor alone or acting through his (her) affiliates, subsidiaries, agents, officials, employees, directors, or servants shall not discriminate in any manner on the basis of age, handicap, sex, race, color, creed or national origin with reference to the subject matter of this Agreement. No person or qualified handicapped person shall on the grounds of race, color, national origin, sex, age or handicap be excluded from participation in, be denied the benefits of, or be subjected to discrimination under this program or activity.

U. Lead Based Paint

The Contractor is hereby made specifically aware of the 24 CFR Part 35 lead-based paint regulations, which are applicable to the construction or rehabilitation of residential structures. To the extent that the subject matter of this Contract involves residential structures, the Contractor will comply with the lead-based paint regulations.

V. Lobbying

(1) No Federal appropriated funds have been paid or will be paid, by or on behalf of the undersigned, to any person for influencing or attempting to influence an officer or employee of any agency, a Member of Congress, an officer or employee of Congress, or an employee of a Member of Congress in connection with the awarding of any federal contract, the making of any federal grant, the making of any federal loan, the entering into of any cooperative, agreement and the extension, continuation, renewal, amendment or modification of any federal contract, grant, loan or cooperative agreement.

(2) If any funds other than federal appropriated funds have been paid or will be paid to any of the above-named entities, the undersigned shall complete and submit Standard Form-LLL, "Disclosure Form to Report Lobbying", in accordance with its instructions.

This is a material representation of fact upon which reliance was placed when this transaction was made or entered into. Submission of this certification is a prerequisite for making or entering into this transaction imposed by Section 1352, Title 31, U.S. Code.

ITEM SUMMARY

ITEM	ITEM DESCRIPTION
1	WORKSITE CONTAINMENT
2	STABILIZATION OF LEAD BASED PAINT
3	REMOVE AND REPLACE WINDOWS
4	REMOVE AND REPLACE INTERIOR DOOR
5	REMOVE/REPLACE DOOR CASING - ENCLOSE JAMB
6	REMOVE AND REPLACE EXT. DOOR
7	REMOVE AND REPLACE BASEBOARD
8	REMOVE SHELVING AND SUPPORTS
9	ENCLOSE FLOOR
10	ENCLOSE WALL AND CEILING
11	ENCLOSE PORCH CEILING
12	DEMO PORCH SIDE D
13	BATHROOM 1 IMPROVEMENTS
14	INSTALL DROP CEILING PANELS
15	INSTALL CLOSET KIT
16	EXTERIOR ENCAPSULATION WITH PAINT - HOME
17	EXTERIOR ENCAPSULATION WITH PAINT - GARAGE
18	INSTALL CEDAR SHINGLE SIDING
19	REMOVE AND REPLACE EXTERIOR TRIM
20	REMOVE AND REPLACE BASEMENT WINDOW
21	ENCLOSE SOIL

NOTES:

1) ALL WORK SHALL BE COMPLETED USING LEAD-SAFE WORK PRACTICES AND WORKER/OCCUPANT PROTECTION PRACTICES THAT COMPLY WITH CURRENT EPA, HUD, AND OSHA STANDARDS.

2) ALL WORK SHALL BE COMPLETED IN ACCORDANCE WITH THE METHODS OUTLINED IN HUD'S 'GUIDELINES FOR EVALUATION AND CONTROL OF LBP HAZARDS IN HOUSING'.

5) REFER TO THE LEAD-BASED PAINT INSPECTION AND RISK ASSESSMENT (LIRA) AND THE PROJECT RISK ASSESSOR FOR ANY CLARIFICATIONS ON WORK ITEMS AND TO ENSURE THE INTENDED LEAD BASED PAINT HAZARDS ARE ABATED.

4) A SUMMARY OF LEAD BASED PAINT HAZARDS AND THE REMEDIATION ACTION REQUIRED BY ROOM, IS PROVIDED IN THIS REPORT.

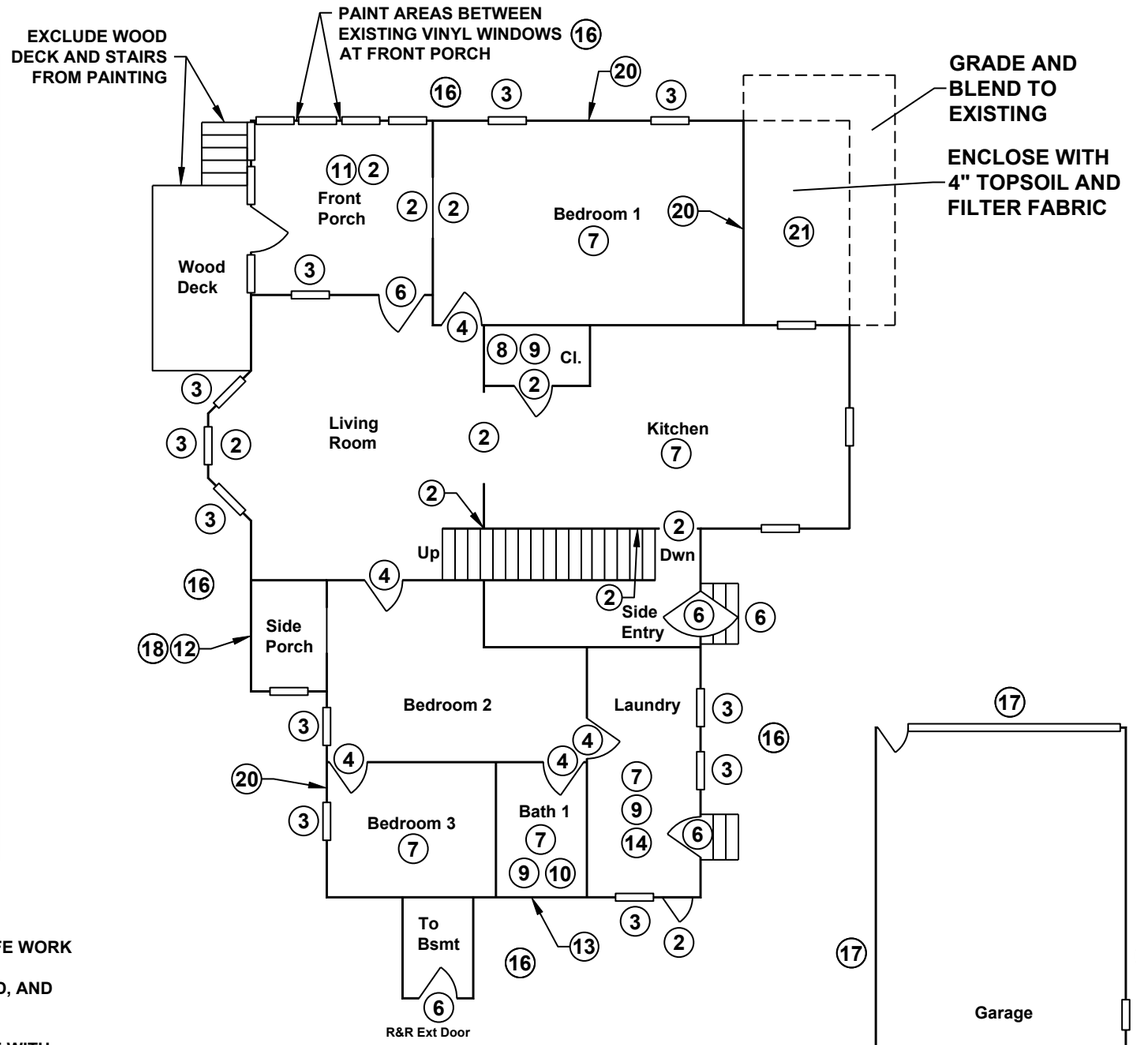

1ST FLOOR PLAN

GARAGE PLAN

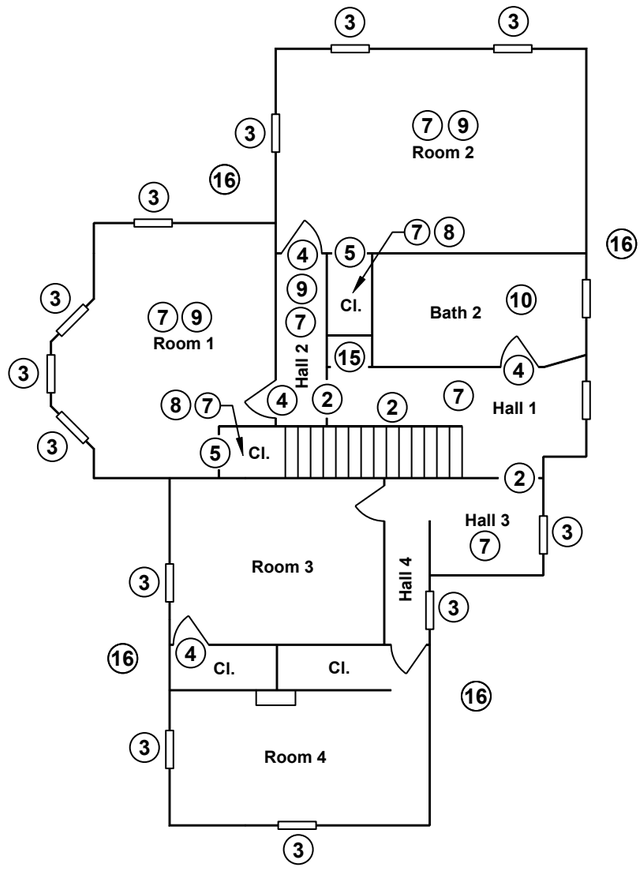

2ND FLOOR PLAN

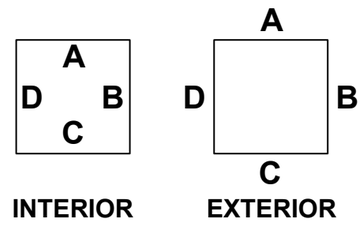

WALL LABEL DETAIL

PROPERTY OWNERS: Jeramy OHanner
YEAR BUILT: 1900
BEDROOMS: 5
OCCUPANTS:
DESIGNED BY: RWR DATE: 11/5/26

Public Health
Prevent. Promote. Protect.
Cattaraugus County Health Department

17 Pine Street

Village of Franklinville
Tax ID No: 40.063-4-11.1

LEAD BASED PAINT HAZARD CONTROL PROJECT

Cattaraugus County Health Department

SPECIAL SPECIFICATIONS

ITEM #1

WORKSITE PREPARATION & CONTAINMENT

Description

Under this item the contractor shall be compensated for proper worksite containment, resident protection and cleaning of work areas and non-work areas on a daily basis. This item applies to preparation and containment of lead dust and lead chips for all pay items and the worksite as a whole.

Refer to Chapter 8 & Chapter 15 of the *HUD Guidelines for Evaluation and Control of Lead Based Paint Hazards in Housing*.

Construction Details

The contractor is responsible for various methods of preventing lead dust from migrating beyond work areas including the use of tape and disposable, impermeable protective sheeting (minimum of 6 mil thickness) as drop clothes including but not limited to covering existing furniture, appliances, flooring, vents, doorways, windows, and soil.

Under this item:

- The contractor shall prepare a written occupant protection plan. The occupant protection plan should be submitted to the Health Department for review, prior to any work taking place.
- The contractor shall protect all furniture, appliances and other items remaining in the home. The contractor may need to relocate, some small items away work areas in preparation for abatement activities.
- The contractor shall ensure lead-safe work practices and construction methods for abatement of lead-based paint hazards are followed per HUD, EPA and OSHA guidelines.
- Workers should ensure they are protected from exposure to lead by wearing personal protective equipment, and practicing personal hygiene.
- Workers should ensure lead dust is not transported from work areas to non-work areas.
- Workers shall place exterior and interior warnings signs at the work-site to prohibit residents and others entry into work areas.
- Workers shall thoroughly clean the site at the end of each workday or work shift by removing dust, debris, and paint chips from all work areas using wet cleaning techniques and a HEPA filter vacuum.
- Exterior sheeting
- Workers shall properly dispose of all debris, protective materials, and cleaning materials off-site.

Relocation
Resident relocation shall be coordinated by the Health Department. An agreed upon time frame (typically two weeks) will be available for all work to be completed and for interim clearance or final clearance to be achieved. The Contractor shall restrict access to the work area at all times while the work is being completed. The Health Department will provide a door handle lock to permit residents from access to the home during off-work hours.

Final Clearance
After completion of the work and final clean-up, the Health Department Risk Assessor shall conduct a clearance examination and collect dust samples from affected areas at least one hour after completion of the final cleanup.

Dust samples are laboratory tested and typically take (1) day to achieve results. Final clearance will be achieved if all dust samples results are reported below 5 micrograms per square foot for floors, 40 micrograms per square foot for window sills and porch floors and 100 micrograms per square foot for window troughs.

If clearance is not achieved, the contactor must return to the site to clean all surfaces where the failing samples were found, at which time a follow up clearance examination will be conducted and dust samples collected for analysis.

Upon clearance of the unit, a clearance certificate will be provided to the contractor and home owner, by the Health Department and the unit may be reoccupied.

Interim Clearance
In some cases, the Contractor may request an Interim Clearance of the home. Interim Clearance is achieved if all of the work areas where lead hazards are disturbed are sampled and all dust sample results are reported below the limits above, and the remaining scope of work does not disturb any additional lead hazards, or disturbance is below the De Minimus level, or the remaining work is in the exterior of the home and does not pose a threat to residents reoccupying the home.

Work that may be completed after Interim Clearance including landscaping work and work to the exterior of the home or basement.

<u>Basis of Payment and Measurement</u>

Measurement and payment of this item shall be by LUMP SUM and shall include all labor, materials, tools and equipment needed to complete the work as described.

ITEM #2

STABILIZIZATION OF LEAD BASED PAINT

Description

Under this item the contractor shall use interim controls to stabilize deteriorated surfaces painted with lead-based paint.

This item is typically used for non-friction or low traffic surfaces, which are structurally sound and show minimal deterioration. This item may be used in combination with other abatement work items.

Construction Details

The contractor shall begin by wet misting the surface with deteriorated paint to keep dust down during the removal process. Deteriorated paint areas include peeling, chipping, chalking and damaged LBP. Then the contractor shall wet scrape or wet sand the affected areas to a smooth finish. The contractor shall remove any dust particles generated from scraping and sanding with a HEPA filter vacuum. Smooth any irregular surfaces or holes in the surface with lead-safe patching compound.

The contactor shall then apply a single coat of vinyl-based primer to the entire surface, allowing adequate time for the primer to dry, per manufacturer's specifications.

The contractor shall then apply a single coat of vinyl-based finishing paint to the entire surface. The paint shall be a white, high gloss paint, unless otherwise indicated in the plans and specifications. Allow adequate time for the final coat to dry, per manufacturer's specifications before clean-up. The final paint surface should be smooth and cleanable.

The following surfaces shall undergo stabilization under this item:

- Front Porch – Cove Molding/Frieze Board, Header Board – Side A, B, C, D
- Front Porch: Door Casing – Side B
- Bedroom 1: Door Casing – Side D
- Living Room: Decorative Molding (3) – Side D (see photo)
- Living Room: Room Opening Casing – Side B
- Kitchen: Door Casing, Jamb – Side A, C, D
- Kitchen Closet: Door Casing, Jamb – C
- Side Entry: Stair Stringer - Side A (see photo)
- Stair (1st floor): Header (see photo)
- Stair (2nd floor): Railing Balusters
- Hall 1: Door Casing – Side C, D
- Hall 2: Door Casing – Side B
- Hall 3: Door Casing – Side A
- Exterior: Crawl Space Door: Side C

1st Floor Staircase



Living Room – Decorative Molding (3)



Side Entry – Stairway Stringer



Exterior Crawl Space Door



Basis of Payment and Measurement

Measurement and payment of this item shall be by LUMP SUM to complete all stabilized surfaces and shall include all labor, materials, tools and equipment needed to complete the work as described.

ITEM #3

REMOVE AND REPLACE WINDOW (DOUBLE HUNG)

Description

Under this item the contractor shall remove and replace an exterior window painted with lead-based paint which generally includes removal of the existing window sash, stops, and panes, and installation of a vinyl replacement (pocket insert) double-hung window. Under this item, the interior window jamb, frame, casing and the exterior jamb, trim casing and decorative casing cap shall be stabilized.

This item is typical when the window sash, jamb, and interior/exterior trim are painted with lead-based paint and deteriorating.

Construction Details

Removal

The contractor shall begin by wet misting areas with deteriorated paint to keep dust down during the removal process. Deteriorated paint areas include peeling, chipping, chalking and damaged LBP. Begin by removing the window components to be discarded for the pocket insert including the storm window, window sash, panes, and parting stops. If the window has springs, weights, or clips carefully cut or break them off and remove them to accommodate the new window frame. Items painted with lead-based paint, as referenced in the LIRA should be handled with caution and properly discarded, off site

Stabilization

After removing the window components, prepare the interior jamb, frame, casing, stool, and apron to be stabilized by smoothing any irregular surfaces or holes in the surface with lead-safe patching compound. Wet scrape or wet sand any components painted with LBP as referenced in the LIRA to a smooth finish. During the removal and stabilization process, the contractor shall continuously remove any dust particles generated from scraping and sanding with a HEPA filter vacuum.

The contactor shall then apply a single coat of vinyl-based primer to the jamb, frame, casing, stool, and apron, allowing adequate time for the primer to dry, per manufacturer's specifications. The contractor shall then apply a single coat of vinyl-based finishing paint to the components. The paint shall be a white, high gloss paint, unless otherwise indicated in the plans and specifications. Allow adequate time for the final coat to dry, per manufacturer's specifications before clean-up. The final paint surface should be smooth and cleanable. If the window does not have interior molding components including casing, stool, or apron the applicable areas should be painted and the homeowner will reconstruct the missing window moldings at a later date.

Next, stabilize the exterior casing and decorative cap. The contractor shall begin by wet misting the surface with deteriorated paint to keep dust down during the removal process. Deteriorated paint areas include peeling, chipping, chalking and damaged LBP. Then the contractor shall wet scrape or wet sand the affected areas to a smooth finish. The contractor shall remove any dust particles generated from scraping and sanding with a HEPA filter vacuum. Smooth any irregular surfaces or holes in the surface with lead-safe patching compound.

Once the surface is smooth and dry, spot prime all bare surfaces and stabilized areas with a single coat of latex exterior primer, allowing adequate time for the primer to dry, per manufacturer's specifications. Then furnish and apply two coats of a high-quality 100% acrylic exterior paint to the entire wood surface, using a brush, roller or air sprayer. Do not paint in conditions outside the manufacturer's recommended temperature (50-90 degrees F) or humidity (< 85%). The paint shall be a white, high gloss paint, unless otherwise indicated in the plans and specifications.

Installation of Vinyl Replacement Window

The contractor shall then install a vinyl replacement (pocket insert) window in the window opening per manufacturer's recommendations, EPA guidelines for abatement, and best construction practices. The vinyl replacement window should be contractor grade and meet the following minimum specifications: Low-E (Energy Star), Argon filled, double-pane, 3.25" minimum depth.

It is the contractor's responsibility for measuring the rough opening and sizing the replacement window to fit, before ordering. The window should be sized so that the contractor may push the new window against the existing apron and window stops, typically with a gap of 1/8" to 1/4" on all sides between the new window and the existing window frame. If the existing window stops were LBP and removed, install new PVC window stops along the jamb, ensuring that the window will be installed level horizontally, plumb vertically, and square. After dry fitting the window, the contractor shall fasten the new window into the frame. Install spray foam or fiberglass insulation along the sides of the new window to insulate the gap between the side of the window and the existing window frame. Caulk the perimeter of the interior of the window between the vinyl and the wood casing, jamb, or trim material.

Next, the contractor should use a combination of flashing, sealant, waterproof caulk, and new PVC/vinyl trim to ensure a waterproof seal along the exterior of the window and the existing exterior casing.

The following are approximate sizes of the window openings being replaced as part of this project.

Type	Floor	Side	Room	Width	Height
Double Hung	1st	A	Bedroom 1	29"	70"
Double Hung	1st	A	Bedroom 1	29"	70"
Double Hung	1st	A	Living Room	29"	70"
Double Hung	1st	B	Laundry	29"	46"
Double Hung	1st	B	Laundry	29"	46"
Double Hung	1st	C	Laundry	29"	46"
Double Hung	1st	D	Bedroom 2	29"	70"
Double Hung	1st	D	Bedroom 3	29"	70"
Double Hung	1st	D	Living Room	29"	70"
Double Hung	1st	D	Living Room	29"	70"
Double Hung	1st	D	Living Room	29"	70"
Double Hung	2nd	A	Room 1	33"	58"
Double Hung	2nd	A	Room 2	29"	58"
Double Hung	2nd	A	Room 2	29"	58"
Double Hung	2nd	B	Hall 3	24"	55"
Double Hung	2nd	B	Hall 4	29"	46"
Double Hung	2nd	C	Room 4	29"	55"
Double Hung	2nd	D	Room 4	29"	55"
Double Hung	2nd	D	Room 3	29"	55"
Double Hung	2nd	D	Room 1	29"	58"
Double Hung	2nd	D	Room 1	29"	58"
Double Hung	2nd	D	Room 1	29"	58"

Basis of Payment and Measurement

Measurement and payment of this item shall be by EACH window removed, replaced and stabilized (interior and exterior) per the above specifications, and shall include all labor, materials, tools and equipment needed to complete the work as described.

ITEM #4

REMOVE AND REPLACE INTERIOR DOOR

Description

Under this item the contractor shall remove and replace an interior door painted with lead-based paint which includes removal and replacement of the entire door, door frame, hinges, door handle, threshold, casing, and other trim material.

This item is typical when the door and surrounding materials are painted with LBP and deteriorated.

Construction Details

Using a utility knife or other sharp instrument, carefully score all affected painted seams, to provide space for a pry instrument and to minimize paint chipping and dust generation during removal.

The contractor shall then remove the existing door, door frame, and any surrounding trim material in preparation to install a new door. Item's painted with lead-based paint, as referenced in the LIRA should be handled with caution and properly discarded, off site.

The contractor shall then furnish and install a new, pre-hung door using standard construction methods. Door widths shall be determined based on the width of the existing door and standard door widths of 18", 24", 28", 30", 32" and 36". Replacement door height shall be 80" unless otherwise specified.

At this home, the door frames on the first floor are 90 inches in height and on the second floor are 84 inches in height. All door frames should be replaced with new doors which are a standard 80 inches in height. The contractor should close the gap left by the difference in door height by installing a new head casing that is wide enough to close the gap between the newly installed door and the top of the door opening.

The contractor shall do their best to match the material of the existing door with a suitable replacement material, using the table below. The contractor shall also do their best to match the architectural glass and paneling of the existing door, while providing standard door designs. All new doors should include a single coat of white primer, upon installation. A door handle should be furnished and installed on the new door, which matches the material and style of the existing door hardware, including replacing locks in-kind if the door is previously fitted with a lock.

Existing Door Material	Replacement Material
Solid Wood	Solid Wood - Pine
Steel	Steel
Hollow Core	Moulded Composite
Other	Moulded Composite

The contractor shall then furnish and install new door casing along the top and sides of the door frame using ½" or ¾" thick cellular PVC Board. Under this item, the width of the casing material may vary – It is the responsibility of the contractor to choose a width of the casing that ensures proper coverage around the door and to ensure there is no gap between the casing and any remaining trim material.

The contractor should do their best to match the casing style of the home by using either a butt joint or miter joint. All seams between trim and the wall and all visible nail holes should be filled with a paintable, white caulk sealant, or similar.

Basis of Payment and Measurement

Measurement and payment of this item shall be for EACH interior door furnished and installed, including the door, door frame, door handle, fasteners, trim, paint and all other labor, materials, tools and equipment needed to complete the work as described.

ITEM #5

REMOVE AND REPLACE INTERIOR DOOR CASING - ENCLOSE JAMB

Description

Under this item the contractor shall remove and replace the head and side casing that is painted with lead-based paint, along an existing interior or exterior door. The contractor shall also enclose the existing door jamb that is painted with lead-based paint.

This item is typical when the door casing and frame material is painted with LBP and deteriorated, the casing is being removed and replaced and there is no door being installed.

Construction Details

Using a utility knife or other sharp instrument, carefully score all affected painted seams, to provide space for a pry instrument and to minimize paint chipping and dust generation during removal.

Then the contractor shall remove the old head, side casing, door stop and any remaining fasteners, ensuring not to damage the existing wall and door jamb. Item's painted with lead-based paint, as referenced in the LIRA should be handled with caution and properly discarded, off site

The contractor shall then enclose the door jamb, by first installing ½" cellular PVC board over all three faces of the door jamb. Caulk should be applied to the perimeter of the backside of the PVC board before installation. The PVC board should then be nailed to the underlying LBP material. Then install a new head and side casings flush with the newly installed PVC jamb enclosure, both along the front and back of the door frame, using ½" or ¾" thick cellular PVC board.

Under this item, the width of the casing material may vary. It is the responsibility of the contractor to confirm the width of the casing, to ensure proper coverage around the door and to ensure there is no gap between the casing and any surrounding baseboard material or other molding.

The contractor should do their best to match the casing style of the home by using either a butt joint or miter joint. All seams between trim and the wall or other molding and all visible nail holes should be filled with a paintable, white caulk sealant, or similar.

Basis of Payment and Measurement

Measurement and payment of this item shall be by EACH door casing replaced & jamb enclosed and shall include all labor, materials, tools and equipment needed to complete the work as described.

ITEM #6

REMOVE AND REPLACE EXTERIOR DOOR

Description

Under this item the contractor shall remove and replace an exterior door painted with lead-based paint which generally includes removal and replacement of the entire door, door frame, hinges, door handle, threshold, storm door, casing, and other trim material.

This item is typical when the door and surrounding materials are painted with LBP and deteriorated.

Construction Details

Using a utility knife or other sharp instrument, carefully score all affected painted seams, to provide space for a pry instrument and to minimize paint chipping and dust generation during removal.

The contractor shall then remove the existing door, threshold, storm door, and any surrounding trim material in preparation to install a new door. Items painted with lead-based paint, as referenced in the LIRA should be handled with caution and properly discarded, off site.

The contractor shall then furnish and install a new, pre-hung door using standard construction methods. Door widths shall be determined based on the width of the existing door and standard door widths of 30", 32" and 36". Replacement door height shall be 80" unless otherwise specified.

The contractor shall do their best to match the material of the existing door with a suitable replacement material, using the table below. The contractor shall also do their best to match the architectural glass and paneling of the existing door, while providing standard door designs. A lockable, exterior door handle and dead bolt should be furnished and installed on the new door, which matches the material and style of the existing door hardware.

Existing Door Material	Replacement Material
Solid Wood	Fiberglass
Steel	Steel
Other	Fiberglass

Prior to installation of the door casing, fiberglass or foam insulation, at a minimum R-value of 21, should be used to fill in any gaps between the door frame and the door opening.

The contractor shall then furnish and install new door casing along the inside and outside of the door frame using ½" or ¾" thick cellular PVC Board. It is the responsibility of the contractor to choose a width of the casing that ensures proper coverage around the door opening and to ensure there is no gap between the casing and any remaining trim material. On the exterior side of the door, aluminum coil wrap may be substituted to enclose the existing casing. The aluminum wrap should overlap the new jamb by a minimum of 1 inch. Secure the wrap to the casing and jamb using painted stainless-steel nails and exterior caulk to ensure an enclosed seal.

Storm Door

(1) storm door installation should be included under this item, at the Side Entry area along house Side B. Install an aluminum storm door (Andersen 3000 series or equal) in the enclosed door frame to complete this item. The door shall include a frame, door handle, a screen, and must be self-closing. EACH storm door installed under this project should be paid the same as a pre-hung exterior door installation.

Basis of Payment and Measurement

Measurement and payment of this item shall be for EACH exterior door furnished and installed, including a pre-hung exterior door or storm door, door handle, fasteners, trim, wrap and all other labor, materials, tools and equipment needed to complete the work as described.

ITEM #7

REMOVE AND REPLACE BASEBOARD TRIM

Description

Under this item the contractor shall remove and replace baseboard trim that is painted with lead-based paint. Replacement of baseboard trim shall also include removal and replacement of toe molding, as needed, as part of this item.

Construction Details

The contractor shall begin by wet misting the affected baseboard, and toe molding to keep dust down during removal, and, using a utility knife or other sharp instrument, carefully score all affected painted seams between the baseboard and the wall and floor, to minimize paint chipping and dust generation during removal.

The contractor shall remove the old baseboard molding, toe molding, and any remaining fasteners, ensuring not to damage the existing wall, floor, wallpaper, or surrounding trim. Removal of the old baseboard may include multiple layers of trim, millwork, and toe molding. The old baseboard/trim material, painted with lead-based paint as referenced in the LIRA, shall be handled with caution and properly discarded, off site.

The contractor shall then install new 5/8" thick cellular PVC baseboard and toe molding as an in-kind replacement, matching the height, thickness, and profile of the existing baseboard and toe molding so that the new material aligns with and matches the adjoining baseboard that remains in place.

Under this item, the height of the baseboard material may vary. It is the responsibility of the contractor to confirm the height and length of the baseboard, to ensure the existing wall and floor are adequately covered.

Inside and outside edges of baseboards shall be mitered, and the contractor must ensure there are no gaps between the new baseboard and any surrounding trim material, including a clean, tight joint where the new section meets the existing baseboard to remain. All visible nail holes and joints shall be filled with a paintable caulk sealant, or similar.

This work shall be completed in conjunction with **Item #9 – Enclose Floor** where new flooring will be installed over the existing floor surface.

The following baseboard areas should be removed and replaced as part of this item:

- Room 1 – Side A, B, C, D
- Room 1 Closet – Side A, B, C
- Room 2 – Side A, B, D
- Room 2 Closet – Side B, C, D
- Bedroom 3 – Side A, B, C, D
- Laundry – Side B
- Hall 1 – Side A, B, C, D
- Hall 2 – Side B, D
- Hall 3 – Side A, B, C, D
- Kitchen – Side A, C
- Bathroom 1 – Side A, B, D
- Bedroom 1 - B, C, D

Basis of Payment and Measurement

Measurement and payment of this item shall be by LINEAR FOOT of baseboard furnished and installed and shall include all labor, materials, tools and equipment needed to complete the work as described.

ITEM #8

REMOVE SHELVING AND WALL SUPPORTS

Description

Under this item the contractor shall remove and discard shelving and wall supports from three closets and a staircase area, that are painted with lead-based paint.

The wood pieces are located in the closets of the Kitchen, Room 1, and Room 2.

See the attached photos and site plan for reference.

Construction Details

Using a utility knife or other sharp instrument, carefully score all affected painted seams, to provide space for a pry instrument and to minimize paint chipping and dust generation during removal of the trim piece.

Then the contractor should remove the trim pieces from the wall and discard them off site. Repair any gaps or holes left in the wall from removal of the trim piece with joint compound - The wall shall have a sanded finish and coated with a single layer of white vinyl paint primer.

Basis of Payment and Measurement

Measurement and payment of this item shall be by EACH closet, where shelving and supports are removed and discarded, and shall include all labor, materials, tools and equipment needed to complete the work as described.

Kitchen Closet



Room #1



Room #2



ITEM #9

ENCLOSE FLOOR

Description

Under this item the contractor shall enclose an existing floor painted with lead-based paint by furnishing and installing new flooring over the existing floor.

This item is typical when the existing floor is painted with lead-based paint or lead-based stain and the floor is in-tact.

Construction Details

The contractor shall begin by thoroughly cleaning the entire flooring surface that will be covered by this item, using wet methods and a HEPA filter vacuum.

Then, the contractor shall place a waterproof, luxury vinyl tile, plank flooring CORETECH, LIFEPROOF, STAINMASTER, or equal. The LVT should be click lock, between 6 and 9 inches in width and must be fitted with a foam underlayment. The contractor shall enclose the entire floor surface with LVT per manufacturer's specifications, and ensure all joints are properly locked and sealed.

Enclosure at Walls

To accommodate expansion, the contractor should follow manufacturer's specifications on recommended spacing between the edge of the new flooring and the wall or baseboard. Work shall be completed in conjunction with **Item #7 Remove and Replace Baseboard** to properly enclose this gap. under Item #7 the contractor shall install new ½" or ¾" PVC quarter round molding along the newly installed baseboard where flooring is installed.

In the Kitchen Closet, where the baseboard is not being replaced, ½" or ¾" PVC quarter round molding should be installed along the existing baseboard where flooring is installed and be paid for under this item. If there is existing show molding in the Kitchen Closet, it should be removed and discarded.

Enclosure at Doorways

Where new flooring meets a door opening, gaps between the casing, door frame, door stop, etc must be sealed for proper enclosure. If the door or door casing are proposed to be removed and replaced, flooring should be installed after the door or door casing are removed, and prior to replacement of the door. If the door and door casing remain, the preferred method to install flooring at the door is to undercut the door casing, stop and jamb and install flooring underneath. However, if the door, door casing and stop are painted with LBP, the contractor may cut the new flooring to abut the doorway – In this

case, the area between the edge of the new flooring and the door casing, stop and jamb shall be filled with caulk and sealed.

When installing the new flooring, it is the responsibility of the contractor to cut around and seal the seams between the new flooring and any obstacles encountered on the surface, such as grates, covers, conduit, pipes, molding, bathroom structures, and other permanent structures.

The contractor must ensure that the proposed flooring does not form a trip hazard in the home. The use of a nailed, aluminum transition strip, or similar should be placed at the any open ends of new flooring.

After installation of the flooring, the contractor shall ensure that an existing door can properly swing and does not create a wear surface or the door shall be trimmed.

Basis of Payment and Measurement

Measurement and payment of this item shall be by SQUARE FOOT of flooring material furnished and installed and shall include all labor, materials, tools and equipment needed to complete the work as described.

ITEM #10

ENCLOSE WALL AND CEILING WITH DRYWALL

Description

Under this item the contractor shall furnish and install new 1/2" moisture-resistant (green board) drywall over the walls and ceiling in the Bathroom 1 and Bathroom 2. The drywall sheeting shall be installed as an overlay over several existing materials including wood planking, lath and plaster, and open framing, which are painted with lead-based paint.

Construction Details

The contractor should assess the surface that the drywall is overlaying. Determine if the existing substrate is lath and plaster, wood siding, or other material. Locate and mark all wall framing members using a stud finder. Use 1 5/8" coarse drywall screws for installation over wood planks and open framing - use 2" to 2 ½" screws over lath and plaster. Remove or loosen cover plates, HVAC registers, light fixtures, plumbing fixtures, and other surface-mounted items, as needed, which should be reinstalled at a later time under this item. Extend electrical boxes as required. The contractor should do their best not to disturb the existing painted surface.

When the existing surface is prepped, begin installing drywall panels on the specified surfaces - Orient panels to minimize joints and install horizontally on walls where practical to reduce seams. Stagger end joints so they do not align with existing wall joints.

Use a professional-grade setting-type joint compound to pre-fill gaps, embedding joint tape in flat joints, cold joints and inside corners. Install corner bead on outside corners. Apply joint compound to all joints and corner angles and later apply a fill coat of joint compound over flat joints, fastener heads and corner beads. Once the initial coats are dry (typically 24 hours later), apply a final, thin skim coat to flat joints, corner beads, fasteners and any other areas that require filling. Let the final coat dry for approximately 24 hours. Then lightly sand the dried finish coat to remove ridges, marks, and imperfections to a level finish.

Wipe the entire surface completely free of drywall dust and apply a single coat of vinyl primer to the newly installed drywall surface.

Drywall enclosure work in Bathroom 1 shall be completed in conjunction with the following items. The contractor should use their judgment on phasing in the demo, and reconstruction of this bathroom: **Item #7 – Remove and Replace Baseboard; Item #9 – Enclose Floor; Item #13 – Demo Shower and Closet**

Basis of Payment and Measurement

Measurement and payment of this item shall be for SQUARE FOOT of finished drywall including all labor, materials, tools and equipment needed to complete the work as described.

ITEM #11

ENCLOSE PORCH CEILING

Description

Under this item the contractor shall enclose the exterior porch ceiling that is painted with lead-based paint, by installing vinyl ceiling panels over the existing ceiling.

The wood moldings below the ceiling and above the windows in this area are also painted with lead-based paint, and should be stabilized under **Item #2 – Stabilization of Lead-Based Paint.**

Construction Details

Ceiling Panels

Enclose the porch ceiling using a white vinyl siding ceiling panel, wainscoting (beadboard) pattern or similar. Remove the existing quarter round molding below the ceiling and install F-channel around the perimeter of the inside of the porch to receive the ceiling panels. Where the existing ceiling boards do not provide solid, continuous backing at the required fastener spacing, install furring strips 16” on center, perpendicular to the panel run, to provide a sound nailing base.

Install the ceiling panels perpendicular to the front wall of the house, working from the F-channel across the ceiling. Fasten the panels per the manufacturer's recommendations. Do not fasten tightly – Leave the manufacturer's recommended expansion gap at the ends and lock each panel into the previous one so the panels are free to expand and contract without buckling. The panels shall fully enclose the existing ceiling surface.

If any lighting fixtures are encountered on the front porch, the contractor shall drop the fixture, install the ceiling panel, and reset the fixture over a mounting plate so the electrical box remains accessible and a finished seal is provided where the fixture meets the new ceiling panels.

This work shall be completed in conjunction with **Item #2 – Stabilization of Lead Based Paint**, where the header/frieze/cove moldings between the ceiling and windows should be painted, typically before installation of the porch ceiling panels.

Basis of Payment and Measurement

Measurement and payment of this item shall be by SQUARE FEET of porch ceiling furnish and installed and shall include all labor, materials, tools and equipment needed to complete the work as described.

ITEM #12

DEMO PORCH SIDE D

Description

Under this item the contractor shall completely remove and dispose of the existing side porch structure of the home depicted in the attached photo. Work includes removal of the porch roof, roof framing and beams, support posts, decking and floor framing, and walls; disconnection of electrical service to the porch area; reconstruction of the exterior corner of the home where the wood plank cladding is shown; infilling of the existing door opening; and installation of new sheathing and house wrap to leave the area weather-tight.

Replacement and repair of the cedar shingle siding shall be completed under **Item #18 – Install Cedar Shingle Siding**

Construction Details

Removal

Begin by disconnecting and safely terminating all electrical service, wiring, and fixtures serving the porch area. All electrical shall be cut off, capped, and made safe in accordance with the National Electrical Code and all applicable local codes.

Then remove the entire porch structure in its entirety, including the roof covering, roof sheathing, rafters, beams, support posts, decking, floor framing, and all wall components down to the face of the existing home. All items may be painted with lead-based paint, should be handled with caution, and discarded properly, off site.

Reconstructing the Corner

At the exterior corner of the home where the wood plank cladding is shown, the contractor shall cut back deteriorated, damaged, or loose planking to sound material and reconstruct the corner framing and sheathing as required to produce a straight, plumb, and structurally sound corner. The contractor shall replace any damaged studs, plates, or framing members discovered during demolition, and sister or supplement existing framing where necessary.

Framing the Door Opening

At the existing door opening, remove the door, and exterior casings, and the particle board cover currently in place. The contractor shall then frame the door opening using 2x6 studs, using a spacing of 16 inch on center. The studs should extend from the sill plate to the top plate of the wall. The contractor shall insulate the newly framed opening with batt insulation with R-21 fiberglass insulation.

Sheathing and House Wrap

Install new OSB sheathing along the newly framed door opening, the reconstructed corner, and any other areas where cladding was removed. The contractor should determine the thickness of the OSB board and ensure the new sheathing is flush with the existing siding to accommodate the cedar shingle siding installed under Item #18. Over Install new house wrap, lapped shingle-fashion and taped at all seams per manufacturer instructions, to provide a continuous weather-tight surface, in preparation for the cedar shingle installation and repair.

Basis of Payment and Measurement

Measurement and payment of this item shall be by LUMP SUM for demolition of the entire porch scope and shall include all labor, materials, tools, equipment, needed to complete the work as described.



ITEM #13

BATHROOM 1 IMPROVEMENTS

Description

Under this item the contractor shall remove components in Bathroom 1, which are painted with lead-based paint, which include removal of the existing fiberglass shower enclosure, the existing closet/shelving area, and the existing flooring and subfloor.

This work shall be completed prior to and in conjunction with **Item#7 – Remove and Replace Baseboard, Item #9 – Enclose Floor** and **Item #10 – Enclose Wall and Ceiling With Drywall.** See the attached photos of the Bathroom #1 components and layout.

Construction Details

Removal

Begin by removing the existing fiberglass shower enclosure along walls B and C. The existing shower drain shall be plugged and remain for future use. The existing water supply lines shall be capped and remain for future use. Next, remove the 2x2 and 2x4 framing that make up the closet/shelving unit along walls C and D, next to the shower enclosure.

Next, remove the existing flooring and subfloor in the entire bathroom area, which is rotted and sunk. The contractor will have to remove the existing toilet and vanity in order to remove the subfloor, which shall be replaced, under this item following the drywall and flooring installation in Item #9 and Item #10. Ensure the toilet and vanity water and sewer lines are accessible following installation of the subfloor, new flooring, and drywall enclosure for reinstallation. Remove the existing baseboard to be replaced in Item #7, prior to removal of the existing flooring and subflooring.

All materials should be discarded, off site, by the contractor and all materials painted with lead-based paint should be handed with caution. Remove all fasteners, shims, and trim that may hinder installation of new baseboard, flooring, and drywall.

Subfloor Replacement

Under this item, the subfloor should be replaced with ½" or ¾" plywood, suitable for use in a bathroom area. Leave a 1/8" gap around the wall perimeter to accommodate expansion. Fasten the subfloor at each floor joist with corrosion resistant subfloor screws, and use shims, as necessary so that the floor is flat and level.

Basis of Payment and Measurement

Measurement and payment of this item shall be by LUMP SUM for the Bathroom 1 improvements and shall include all labor, materials, tools, equipment, needed to complete the work as described.

Bathroom 1 Photos



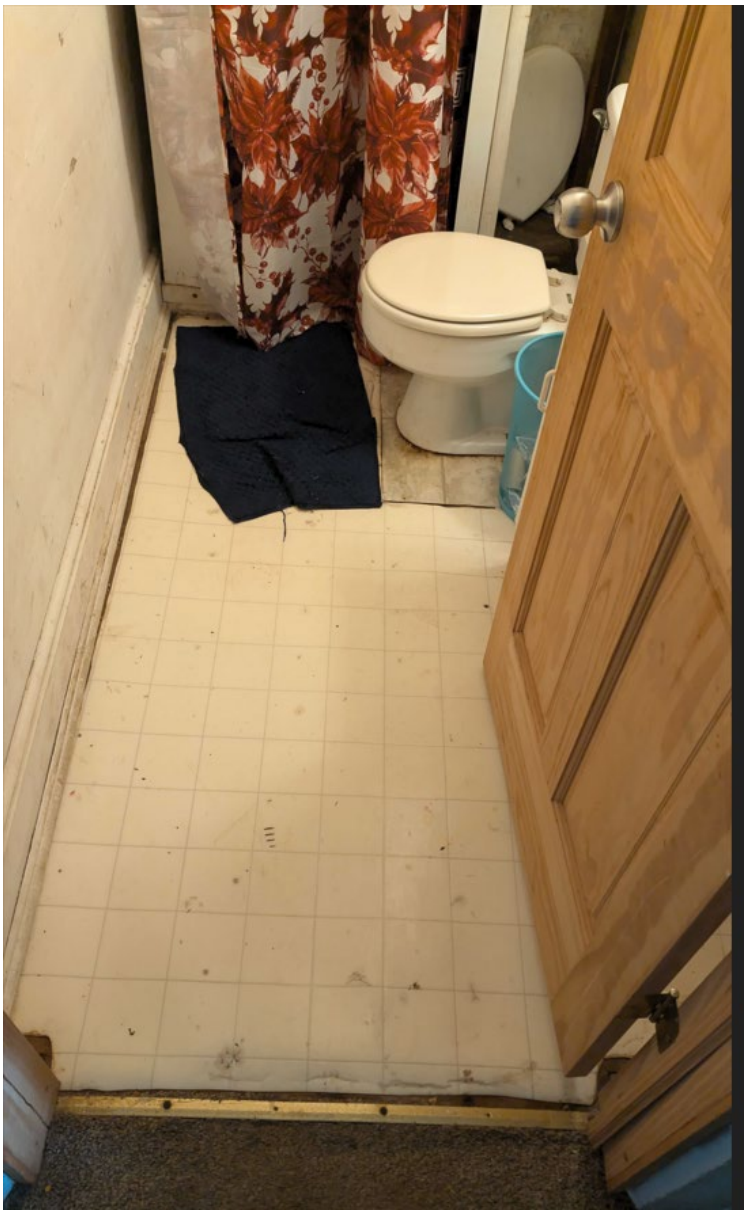

ITEM #14

INSTALL DROP CEILING PANELS

Description

Under this item the contractor shall install new drop ceiling panels in the Laundry Room Area of the home. Three (3) existing drop ceiling panels are warped and broken, exposing a lead-based paint ceiling in one corner of the room.

Construction Details

Begin by removing the three (3) existing drop ceiling panels depicted in the attached photo. Take care not to disturb any of the lead-based paint above the drop ceiling. Discard the existing panels off site.

Next, measure and install new drop ceiling panels in the existing drop ceiling framework to enclose the ceiling. The contractor is responsible for measuring, cutting, and installing the new panels so that the provide a snug fit. The panels are approximately 24” x 48”.

Drop Ceiling Panels



Basis of Payment and Measurement

Measurement and payment of this item shall be for EACH drop ceiling panel removed and replaced shall include all labor, materials, tools, equipment, needed to complete the work as described.

‘

ITEM #15

INSTALL CLOSET KIT

Description

Under this item the contractor shall remove built-in shelving and cabinetry that is painted with lead-based paint. The shelving and cabinetry are located in an upstairs closet in Hall 1, as indicated on the site plan and the attached photo.

After removal of the items painted with LBP, new shelving shall be installed inside the closet and the outside casing shall be stabilized.

Construction Details

Using a utility knife or other sharp instrument, carefully score all affected painted seams, to provide space for a pry instrument and to minimize paint chipping and dust generation during removal.

Then the contractor should begin dismantling the built-in shelving, shelf supports, drawers and cabinet. Item's painted with lead-based paint, as referenced in the LIRA should be handled with caution and properly discarded, off site.

Upon removal of the built-in items, a closet shelf system shall be installed. The existing closet dimensions are approximately 84" H x 26" W x 25" D. The shelving system should be built with vertical panels on the sides, back and top to enclose the lead-based paint walls of the existing closet.

The closet system should accommodate shelving and drawers. A total of (3) horizontal shelves should be installed in the top portion of the closet and (3) horizontal drawers in the lower portion of the closet, equally spaced from the floor to ceiling, and which accommodates the entire width and height of the closet. Ensure the closet system fully encloses the existing lead based paint walls and ceiling. The shelf system should be melamine (or equal). Consult with the homeowner on any other preferences.

Under this item, stabilize the exterior casing of the closet opening. The contactor shall then apply a single coat of vinyl-based primer to the entire surface, allowing adequate time for the primer to dry, per manufacturer's specifications. The contractor shall then apply a single coat of vinyl-based finishing paint to the entire surface. The paint shall be a white, high gloss paint, unless otherwise indicated in the plans and specifications. Allow adequate time for the final coat to dry, per manufacturer's specifications before clean-up. The final paint surface should be smooth and cleanable.

Basis of Payment and Measurement

Measurement and payment of this item shall be by LUMP SUM and shall include all labor, materials, tools and equipment needed to complete the work as described.

Existing Closet Opening



ITEM #16

EXTERIOR ENCAPSULATION WITH PAINT - HOME

Description

Under this item the contractor shall furnish all labor, materials, tools, and equipment to prepare, encapsulate, and repaint the exterior wood surfaces of the main house, that are painted with lead-based paint so that all remaining exposed lead-based-painted surfaces are made intact and sound.

Work includes surface preparation of deteriorated and previously painted surfaces, application of one (1) coat of an EPA-recognized encapsulant, and application of two (2) finish coats of 100% acrylic latex exterior paint over the encapsulant.

The painted surfaces under this item include, but are not limited to, the cedar shingle siding, wood siding (basement entrance), moldings, clapboards, decorative corbels, soffit, fascia, and all other wood surfaces of the home.

This work shall be completed in conjunction with **Item #3 – Remove and Replace Windows (Double Hung)** which includes stabilization of the window casings and decorative caps. Use **Item #18 – Install Cedar Shingle Siding** and **Item # 19 – Remove and Replace Fascia Board** to address any broken or rotted wood pieces along the home, prior to painting.

Prior to any preparation, the contractor shall establish exterior containment in accordance with lead-safe work practices and **Item #1 – Worksite Preparation and Containment**.

All work under this item shall be completed in accordance with the current HUD *Guidelines for the Evaluation and Control of Lead-Based Paint Hazards in Housing* and the U.S. EPA Renovation, Repair and Painting (RRP) Rule. The contractor shall use lead-safe work practices throughout.

Surface Preparation – Deteriorated Painted Surfaces

There is minimal surface preparation of the existing cedar shingles, since they are treated with lead-based stain and not painted. The wood siding, moldings, clapboards, decorative corbels, soffit and fascia are deteriorated. On the deteriorated surfaces, the contractor shall remove all loose, peeling, flaking, and non-adhering paint by wet-scraping and lead-safe hand-tool methods, HEPA-equipped power tools where permitted. Feather and sand the edges of the remaining sound paint to a smooth, firmly bonded transition, using wet-sanding or HEPA-shrouded sanding only. Wire-brush and de-gloss all remaining sound coating so the encapsulant will bond. Wash the surfaces to remove chalk, dirt, and

mildew, then rinse and allow to dry. Reseat or replace fasteners as needed, and prime any exposed bare wood with the encapsulant manufacturer's approved primer where the product data sheet requires it. The encapsulant shall not be applied over loose, peeling, or non-adhered paint. For the cedar shingles ensure a primer is chosen that can adhere to a wood surfaces that is treated with lead-based stain.

Encapsulant and Finish Application

Apply one (1) coat of an EPA-recognized liquid or elastomeric encapsulant to all prepared painted surfaces, both deteriorated and previously painted, at the manufacturer's specified wet- and dry-film thickness and spread rate. Apply within the manufacturer's temperature, humidity, and surface-moisture limits. Back-brush or back-roll the encapsulant into the profile of the clapboard, shingles, corbels, moldings, and decorative trim, and allow the full cure and recoat time before top-coating.

Over the cured encapsulant, apply two (2) finish coats of 100% acrylic latex exterior paint that is compatible with and approved over the encapsulant system, following the encapsulant manufacturer's recoat window and compatibility requirements. Each coat shall be applied to a uniform hide and film build and allowed to dry per the paint data sheet. The finished build sequence for all painted surfaces shall be prepared substrate, encapsulant, acrylic latex, acrylic latex.

The encapsulant products shall carry a manufacturer certification of compliance with ASTM E1795 (non-reinforced) or ASTM E1797 (reinforced), as applicable, and shall be listed or recognized as a lead-based paint encapsulant. The contractor shall provide product data sheets and encapsulant certifications to the Health Department before application.

Color Selection

The finish colors shall be selected by the owner. The owner shall select (1) color for the cedar shingles from the top-coat manufacturer's standard exterior acrylic latex line approved for use over the encapsulant. The remaining wood sections shall be painted with white high-gloss paint. The contractor shall provide manufacturer color samples for owner approval before ordering the finish paint.

Cleanup and Clearance

Paint chips and debris shall be continuously contained on the ground sheeting and not allowed to spread beyond the containment. Upon completion, the contractor shall collect, bag, and dispose of all paint debris and used sheeting in accordance with applicable lead-safe and solid-waste requirements, and shall HEPA-vacuum and wet-clean the exterior work area and adjacent surfaces. The work under this item shall pass clearance and cleaning verification as required by the RRP Rule and the CCHD lead hazard control program before the work is accepted, and a visual review shall confirm that no deteriorated paint remains and that all encapsulated and painted surfaces are intact.

Basis of Payment and Measurement

Measurement and payment of this item shall be by LUMP SUM for preparing, encapsulating, and painting the exterior lead-based-painted surfaces as described, and shall include the furnishing and installation of all materials and the furnishing of all labor, tools, and equipment needed to complete the work as described.

This item shall include all surface preparation, containment and protection, the encapsulant, the finish paint, and all painting supplies and equipment, including but not limited to brushes, rollers, sprayers, primers, caulk, masking and containment materials, ground sheeting, and fasteners. This item shall also include any lift, scaffold, staging, ladders, or other heavy equipment needed to reach and complete the work at all elevations and heights, cleanup, waste disposal, and clearance. No separate payment shall be made for any of the above. The cost of such work, materials, and equipment shall be included in the lump-sum price bid for this item.

ITEM #17

EXTERIOR ENCAPSULATION WITH PAINT - GARAGE

Description

Under this item the contractor shall furnish all labor, materials, tools, and equipment to prepare, encapsulate, and repaint the exterior wood surfaces of the detached garage, that are painted with lead-based paint so that all remaining exposed lead-based-painted surfaces are made intact and sound.

Work includes surface preparation of deteriorated and previously painted surfaces, application of one (1) coat of an EPA-recognized encapsulant, and application of two (2) finish coats of 100% acrylic latex exterior paint over the encapsulant.

The painted surfaces under this item include, but are not limited to, the cedar shingle siding, corner moldings, window moldings, clapboards, soffit, fascia, and all other wood surfaces of the exterior of the garage.

Use **Item #18 – Repair Cedar Shingle Siding** and **Item # 19 – Remove and Replace Fascia Board** to address any broken or rotted wood pieces along the garage, prior to painting.

Prior to any preparation, the contractor shall establish exterior containment in accordance with lead-safe work practices and **Item #1 – Worksite Preparation and Containment**.

All work under this item shall be completed in accordance with the current HUD *Guidelines for the Evaluation and Control of Lead-Based Paint Hazards in Housing* and the U.S. EPA Renovation, Repair and Painting (RRP) Rule. The contractor shall use lead-safe work practices throughout.

Surface Preparation – Deteriorated Painted Surfaces

There is minimal surface preparation of the existing cedar shingles, since they are treated with lead-based stain and not painted. The moldings, clapboards, soffit and fascia are deteriorated. On the deteriorated surfaces, the contractor shall remove all loose, peeling, flaking, and non-adhering paint by wet-scraping and lead-safe hand-tool methods, HEPA-equipped power tools where permitted. Feather and sand the edges of the remaining sound paint to a smooth, firmly bonded transition, using wet-sanding or HEPA-shrouded sanding only. Wire-brush and de-gloss all remaining sound coating so the encapsulant will bond. Wash the surfaces to remove chalk, dirt, and mildew, then rinse and allow to dry. Reseat or replace fasteners as needed, and prime any exposed bare wood with the encapsulant manufacturer's approved primer where the product data sheet requires it. The

encapsulant shall not be applied over loose, peeling, or non-adhered paint. For the cedar shingles ensure a primer is chosen that can adhere to a wood surfaces that is treated with lead-based stain.

Encapsulant and Finish Application

Apply one (1) coat of an EPA-recognized liquid or elastomeric encapsulant to all prepared painted surfaces, both deteriorated and previously painted, at the manufacturer's specified wet- and dry-film thickness and spread rate. Apply within the manufacturer's temperature, humidity, and surface-moisture limits. Back-brush or back-roll the encapsulant into the profile of the clapboard, shingles, corbels, moldings, and decorative trim, and allow the full cure and recoat time before top-coating.

Over the cured encapsulant, apply two (2) finish coats of 100% acrylic latex exterior paint that is compatible with and approved over the encapsulant system, following the encapsulant manufacturer's recoat window and compatibility requirements. Each coat shall be applied to a uniform hide and film build and allowed to dry per the paint data sheet. The finished build sequence for all painted surfaces shall be prepared substrate, encapsulant, acrylic latex, acrylic latex.

The encapsulant products shall carry a manufacturer certification of compliance with ASTM E1795 (non-reinforced) or ASTM E1797 (reinforced), as applicable, and shall be listed or recognized as a lead-based paint encapsulant. The contractor shall provide product data sheets and encapsulant certifications to the Health Department before application.

Color Selection

The finish colors shall be selected by the owner. The owner shall select (1) color for the cedar shingles from the top-coat manufacturer's standard exterior acrylic latex line approved for use over the encapsulant. The remaining wood sections shall be painted with white high-gloss paint. The contractor shall provide manufacturer color samples for owner approval before ordering the finish paint.

Cleanup and Clearance

Paint chips and debris shall be continuously contained on the ground sheeting and not allowed to spread beyond the containment. Upon completion, the contractor shall collect, bag, and dispose of all paint debris and used sheeting in accordance with applicable lead-safe and solid-waste requirements, and shall HEPA-vacuum and wet-clean the exterior work area and adjacent surfaces. The work under this item shall pass clearance and cleaning verification as required by the RRP Rule and the CCHD lead hazard control program before the work is accepted, and a visual review shall confirm that no deteriorated paint remains and that all encapsulated and painted surfaces are intact.

Basis of Payment and Measurement

Measurement and payment of this item shall be by LUMP SUM for preparing, encapsulating, and painting the exterior lead-based-painted surfaces as described, and shall include the furnishing and installation of all materials and the furnishing of all labor, tools, and equipment needed to complete the work as described.

This item shall include all surface preparation, containment and protection, the encapsulant, the finish paint, and all painting supplies and equipment, including but not limited to brushes, rollers, sprayers, primers, caulk, masking and containment materials, ground sheeting, and fasteners. This item shall also include any lift, scaffold, staging, ladders, or other heavy equipment needed to reach and complete the work at all elevations and heights, cleanup, waste disposal, and clearance. No separate payment shall be made for any of the above. The cost of such work, materials, and equipment shall be included in the lump-sum price bid for this item.

ITEM #18

INSTALL CEDAR SHINGLE SIDING

Description

This item covers the repair and replacement of deteriorated wood (cedar) shingle siding at the home and garage, including the infill of all wall areas exposed by the porch demolition performed under **Item #12 – Demo Porch Side D**. Work includes removal of failed, rotted, split, missing, cupped, and loose shingles and replacement with new cedar shingles to match the existing size and coursing of the existing siding.

The existing shingles tested positive for lead-based stain or paint and should be handled using lead-safe work practices, although the cedar shingles are not in a deteriorated state.

Following this work, the cedar shingles will be painted under **Item # 16 – Exterior Encapsulated With Paint – Home** and **Item #17 – Exterior Encapsulation with Paint – Garage**

This work shall also be completed in conjunction with **Item #3 – Remove and Replace Windows** and **Item #12 – Demo Porch Side B**

Construction Details

Determination of Repair Areas

The attached photographs identify representative areas of deterioration, including rotted, damaged, failed, split and displaced shingles. These photographs may not be an exhaustive list of the work. The contractor should walk the home with the Risk Assessor prior to and during the work to jointly determine the actual limits of repair and replacement. Generally, any shingle that is rotted, missing, loose, or that will not hold paint and shed water shall be replaced. Shingles that are cupped, split, may not be replaced and sound, flat, and tight to the wall shingles shall remain. The Risk Assessor shall make the final determination on which sections and the limits of repair and replacement.

Water-Resistant Barrier

Where shingles are removed, assess the existing water-resistant barrier and if necessary install new asphalt-saturated felt or an equivalent code-compliant water-resistive barrier behind the repaired area. The barrier shall be lapped under the existing barrier so that water may shed properly.

Cedar Shingles

Install new red cedar shingles, No. 1 Grade or better, matching the exposure and nominal length and width of the existing shingles. Install a doubled starter course at the base of the porch-infill area, verified level with a chalk line, with the bottom of the starter course located below the bottom of the existing shingle siding. Install new shingles working upward to match the existing coursing, keeping courses level and butts to a consistent line.

Maintain approximately 1/4 inch gaps between adjacent shingles for expansion. Offset vertical joints a minimum of 1-1/2 inches from joints in the course immediately below, and stagger joints so that no joint aligns within three courses. Fasten each shingle with two hot-dipped galvanized or stainless-steel ring-shank siding nails, placed approximately 1 inch from each edge and approximately 1 inch above the butt line of the course above, so that fastener heads are concealed by the following course.

At the former porch area, shingle the full exposed wall to match the surrounding exposure and coursing, and terminate at the corners. Install corner boards, head flashing, and trim as required to produce a weathertight assembly.

Upon completion, all new and disturbed shingle surfaces shall be left clean, sound, dry, and ready to receive paint under Item #16.

Basis of Payment and Measurement

Measurement and payment of this item shall be by SQUARE FOOT of cedar shingle siding furnished and installed and shall include all labor, materials, tool and equipment needed to complete the work as described.

Example of Loose and Missing Shingles







Example of Missing and Rotted Shingles



ITEM #19

REMOVE AND REPLACE EXTERIOR TRIM

Description

Under this item the contractor shall remove and replace trim pieces on the exterior of the home, that are broken, damaged beyond repair, or rotted and painted with lead-based paint. Pieces of soffit and fascia have been identified as requiring removal and replacement.

All work under this item shall be approved by the County Risk Assessor before removal or replacement of trim pieces.

Construction Details

Prior to encapsulation of the exterior of the home in **Item #16 – Exterior Encapsulation with Paint – Home** and **Item #17 – Exterior Encapsulation with Paint - Garage** the contractor shall inspect the exterior of the home and garage for broken, damaged, or rotted trim pieces that should not remain on the home. An example of a rotted fascia board and missing fascia piece are shown in the photo on the following page.

Once a piece of trim is identified and approved, the contractor shall remove the impacted section of trim painted with lead-based paint. Using a utility knife or other sharp instrument, carefully score all affected painted seams, to provide space for a pry instrument and to minimize paint chipping and dust generation during removal.

Replace the section of trim, in-kind with a PVC trim that is the same size and profile as the trim piece being removed. Use exterior grade fasteners and ensure a snug fit with the surrounding exterior siding materials.

Basis of Payment and Measurement

Measurement and payment of this item shall be by LINEAR FOOT of trim material furnished and installed and shall include all labor, materials, tools and equipment needed to complete the work as described.

Example of Broken Fascia Board



Example of Missing Soffit Piece

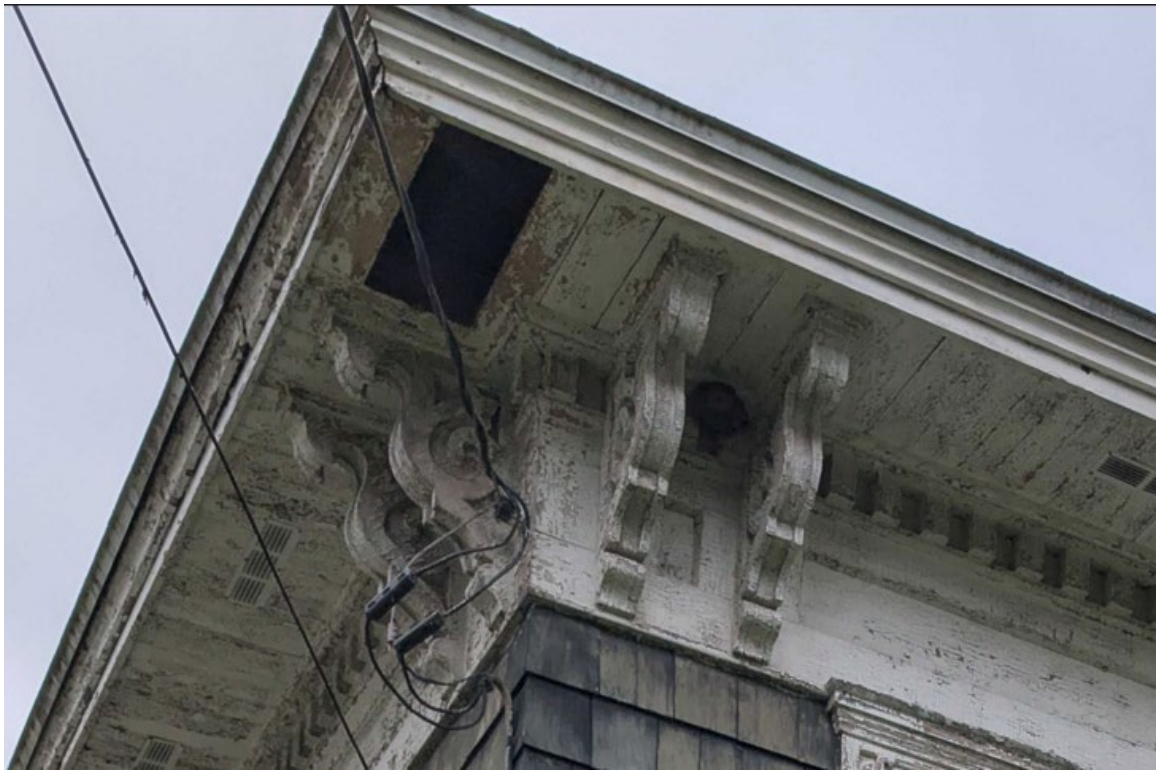

ITEM #20

REMOVE AND REPLACE WINDOW (BASEMENT)

Description

Under this item the contractor shall remove and replace an exterior basement window painted with lead-based paint which generally includes removal of the existing window sash and frame, and installation of a buck frame and vinyl replacement window or glass blocking..

This item is typical when the window sash, or window frame are painted with lead-based paint and deteriorating.

Construction Details

Removal

The contractor shall begin by wet misting areas with deteriorated LBP paint to keep dust down during the removal process. Deteriorated paint areas include peeling, chipping, chalking and damaged LBP.

Next, remove the window components to be discarded including the plastic covering, window sash, window panes and window frame. Chisel away any loose mortar or old concrete from the edges of the window opening and foundation so the edges of the opening are flat and smooth. Items painted with lead-based paint, as referenced in the LIRA should be handled with caution and properly discarded, off site.

Installation of Frame

Install waterproof flashing along the perimeter of the window opening to ensure a waterproof seal. Next, construct a buck frame in the window opening using 2" pressure-treated lumber. The width of the PT lumber should match the width of the foundation. Cut a header, sill, and side jambs to the length of the window opening and fasten to the perimeter of the opening using 3" exterior grade masonry screws (Tapcons or equal). Ensure the sill piece is sloped at least an 1/8"/FT towards the exterior of the home.

Vinyl Replacement Window – Option #1

If option #1 is chosen, the contractor shall install a vinyl replacement window approximately 2 inches from the front of the window opening, by fastening the window to the newly installed PT frame, per manufacturer's recommendations. The vinyl replacement window should be a, hopper-style, contractor grade, basement window and meet the following minimum specifications: Low-E (Energy Star), Argon filled, double-pane, 3.25" minimum depth.

It is the contractor’s responsibility for measuring the rough opening and sizing the replacement window to fit, before ordering. The window should be sized so that there is a gap of 1/8” to 1/4" on all sides between the new window and the existing window frame. After fastening the new window into the frame, install spray foam insulation along the sides of the new window to fill in the gap between the side of the window and the existing window frame. Next, install a sloped PVC trim piece to the buck frame, along the outside perimeter of the new window, large enough to fill the gaps between the new frame and window. Seal the edges of the trim pieces with caulk and nail in place with painted, stainless steel trim nails.

Glass Block Window – Option #2

If option #2 is chosen, the contractor shall install a glass block window panel sized to fit the rough opening. The glass block panel may be furnished as a pre-assembled unit or assembled in place by the contractor, at the contractor's option, provided the finished installation meets the specifications below.

The glass block window shall be constructed of nominal 3" thick glass block units, mortared together with a standard mortar joint, and shall include one standard operable glass block vent to provide ventilation. The finished panel shall be sized so that there is a gap of 1/4" to 1/2" on all sides between the glass block panel and the buck frame.

Pre-Assembled Panel: Where a factory pre-assembled panel is used, set the panel approximately 2 inches from the front of the window opening and center it within the buck frame. Secure the panel in place and pack the perimeter gap between the panel and the buck frame with mortar.

Field-Assembled Panel: Where the contractor assembles the glass block in place, lay the glass block units in standard running or stacked bond within the buck frame using glass block mortar, maintaining consistent joint spacing and incorporating horizontal joint reinforcement and panel anchors or expansion strips per the manufacturer's recommendations. Install the glass block vent generally in the center of the window. Set the completed assembly approximately 2 inches from the front of the window opening and centered within the buck frame.

In either case, tool the mortar joints smooth and strike flush with the face of the glass block. Where perimeter gaps exceed the capacity of mortar, install expansion/filler strips per the manufacturer's recommendations before mortaring. After the mortar has set, install a sloped PVC trim piece to the buck frame along the outside perimeter of the glass block panel, large enough to fill any remaining gaps between the buck frame and the panel. Seal the edges of the trim pieces with caulk and nail in place with painted, stainless steel trim nails. Seal the exterior perimeter joint between the glass block panel and the buck frame with exterior-grade caulk to ensure a waterproof seal.

The following are approximate sizes of the basement window opening being replaced as part of this project. These sizes are to give the contractor a general idea of window sizes for bidding. Actual window openings must be confirmed by the contractor prior to purchasing vinyl replacement windows.

Type	Side	Width	Height
Basement	A	32"	17"
Basement	B	32"	17"
Basement	D	32"	17"

Basis of Payment and Measurement

Measurement and payment of this item shall be by EACH window removed and replaced per the above specifications, and shall include all labor, materials, tools and equipment needed to complete the work as described.

ITEM #21

ENCLOSE SOIL

Description

Under this item the contractor shall enclose a section of soil in the front yard of the property, which is contaminated with lead-based paint, by installing filter fabric and newly placed topsoil and seed.

The contractor will filter fabric, and new topsoil and seed. The area to be enclosed is approximately 14’ x 7’.

Construction Details

Begin by installing a heavy-duty, water-permeable geotextile filter fabric along the surface of the 14’ x 7’ area being enclosed, as indicated on the plans.

Then furnish and install screened, clean topsoil free from roots, weeds, and stones a minimum of 3 inches in thickness along the entire surface of the newly installed filter fabric. Topsoil shall be distributed to a uniform depth over the area. Then install additional topsoil along the outside perimeter of the area being enclosed. Grade and blend from the 3 inch thick enclosed topsoil area to the existing grassy area. The width of the additional topsoil grading should be approximately 3 feet in width. The topsoil shall be graded to prevent puddling and promote drainage away from the foundation of the home.

Then the contractor shall hydroseed the entire topsoil surface area. Apply the hydroseeding in the form of a slurry consisting of seed mixture, organic soil amendments, and commercial fertilizer.

Basis of Payment and Measurement

Measurement and payment of this item shall be by LUMP SUM and shall include all labor, materials, tools and equipment needed to complete the work as described.

ITEMIZED PROPOSAL - 17 Pine Street, Franklinville

For Abatement of Lead-Based Paint Hazards

ITEM NO.	Construction	Unit	QTY.	Unit Price	Unit Price x QTY.
1	Worksite Preparation and Containment	L.S.	1		
2	Stabilization of Lead Based Paint	L.S.	1		
3	Remove and Replace Window (Double Hung)	EACH	23		
4	Remove and Replace Interior Door	EACH	9		
5	Remove and Replace Door Casing - Enc. Jamb	EACH	2		
6	Remove and Replace Exterior Door	EACH	5		
7	Remove and Replace Baseboards	L.F.	350		
8	Remove Shelving and Supports	EACH	3		
9	Enclose Floor	SQ. FT.	730		
10	Enclose Wall and Ceiling w/ Drywall	SQ. FT.	550		
11	Enclose Porch Ceiling	SQ. FT.	138		
12	Demo Porch Side D	L.S.	1		
13	Bathroom 1 Improvements	L.S.	1		
14	Install Drop Ceiling Panels	EACH	3		
15	Install Closet Kit	L.S.	1		
16	Exterior Encapsulation w/ Paint - Home	L.S.	1		
17	Exterior Encapsulation w/ Paint - Garage	L.S.	1		
18	Install Cedar Shingle Siding	SQ. FT.	150		
19	Remove and Replace Exterior Trim	L.F.	20		
20	Remove and Replace Basement Window	EACH	3		
21	Enclose Soil	L.S.	1		
			TOTAL		

TOTAL AMOUNT OF BID: _____

TOTAL AMOUNT OF BID WRITTEN IN WORDS: _____

The undersigned having familiarized themselves with the requirements of the proposal affecting the cost of the materials supplied and with the Contract Documents and Specifications, hereby submit the above bid for the abatement of lead-based paint hazards at 17 Pine Street, Franklinville, NY

Dated: _____

_____
Legal Name of Person, Firm or Corporation

By: _____

Title: _____

Street No: _____

_____
City State Zip

NON-COLLUSIVE BIDDING CERTIFICATION

(Required by Section 151(5) of the New York State Public Housing Law)

By submission of this bid/Proposal, each bidder/Proposer and each person signing on behalf of any bidder/Proposer certifies, and in the case of a joint bid/Proposal each party thereto certifies as to its own organization, under penalty of perjury, that to the best of his knowledge and belief:

(i) The prices in this bid/Proposal have been arrived at independently without collusion, consultation, communication, or agreement, for the purpose of restricting competition, as to any matter relating to such prices with any other bidder/Proposer or with any competitor;

(ii) Unless otherwise required by law, the prices which have been quoted in this bid/Proposal have not been knowingly disclosed by the bidder/Proposer and will not knowingly be disclosed by the bidder/Proposer prior to opening, directly or indirectly, to any other bidder/Proposer or to any competitor; and

(iii) No attempt has been made or will be made by the bidder/Proposer to induce any other person, partnership or corporation to submit or not to submit a bid/Proposal for the purpose of restricting competition.

Name of Proposer: _____

Signature: _____

Print Name: _____

Title: _____

Date: _____

LEGAL STATUS INFORMATION

To facilitate correct drawing and execution of contract, bidder shall supply full information concerning legal status:

FIRM NAME:_____

Federal ID No.:_____

PRINCIPAL OFFICE:

Street_____

City, State, Zip _____

Telephone (___)_____ Fax (___)_____ Email: _____

LOCAL OFFICE:

Street _____

City, State, Zip _____

Telephone (___)_____ Fax (___)_____ Email: _____

CONTRACT TO BE SENT TO: Principal Office _____ Local Office _____

CHECK ONE: Corporation _____ Partnership _____ Individual _____

(Incorporated under the Laws of the State of _____)

(If foreign corporation, state if authorized to do business in the State of New York: Yes _____ No _____ Not Applicable _____)

TRADE NAMES:

_____

NAMES AND ADDRESSES OF PARTNERS:

_____ _____

_____ _____

_____ _____

NAME, TITLE, AND ADDRESS OF PERSON AUTHORIZED TO SIGN CONTRACT ON BEHALF OF BIDDER:

Name: _____

Title: _____

Address: _____

PLEASE TYPE OR PRINT

Abatement of Lead-Based Paint Hazards in Residential Housing HUD Lead Hazard Reduction Capacity Building Grant Program

Executive Order 14 and Executive Order 16 Certification

This certification is required from all Prime Contractors and Consultants prior to contract award and all Subcontractors prior to Approval to Subcontract.

New York State Executive Order No. 14 directs State Entities, to the extent practicable, to divest their money and assets and terminate contracts with institutions or companies headquartered in Russia or with their principal place of business in Russia, "protecting New York from financing discrimination against the Ukrainian people". New York State Executive Order (herein, "Executive Order") No. 16 directs State Entities to refrain from entering into any new contract or renewing any existing contract with an Entity conducting business operations in Russia until such time as sanctions imposed by the federal government are no longer in effect.

For purposes of this certification, and as set forth in Executive Order No. 16, an "Entity conducting business operations in Russia" means "an institution or company, wherever located, conducting any commercial activity in Russia or transacting business with the Russian Government or with commercial entities headquartered in Russia or with their principal place of business in Russia in the form of contracting, sales, purchasing, investment, or any business partnership."

Notwithstanding the foregoing, an Affected State Entity may contract with an Entity conducting business operations in Russia provided that the head of the Affected State Entity makes a determination in writing that the investment or contract is necessary for the Affected State Entity to perform its functions and that no suitable investment or contractual alternatives exist.

In accordance with Executive Order No. 14 and Executive Order No. 16 (collectively, "the Executive Orders"), specific to the bid or proposal submitted for the above referenced contract or solicitation, and as evidenced by signature affixed hereto, Offeror/Bidder/Contractor /Consultant (or any assignee) certifies they: (1) are not an Entity conducting business operations in Russia, (2) are not conducting, will not conduct, and will not engage any such company that conducts, commercial activity with (a) the Russian Government, and (b) commercial entities headquartered in Russia or with their principal place of business in Russia, in the form of contracting, sales, purchasing, investment, or any business partnership.

Cattaraugus County reserves the right to reject any bid, proposal, grants, or request for assignment of any Offeror / Bidder / Contractor / Consultant, and to pursue a responsibility review with respect to any entity that is awarded a contract, if found to be in violation of this Certification or the Executive Orders.

Contractor [Name]: _____

By [signature]: _____

Name [print]: _____

Title: _____

Date: _____
(mm/dd/yyyy)

This certification must be signed by an authorized executive or legal representative

Abatement of Lead-Based Paint Hazards in Residential Housing HUD Lead Hazard Reduction Capacity Building Grant Program

Executive Order 14 and Executive Order 16 Certification

This certification is required from all Prime Contractors and Consultants prior to contract award and all Subcontractors prior to Approval to Subcontract.

New York State Executive Order No. 14 directs State Entities, to the extent practicable, to divest their money and assets and terminate contracts with institutions or companies headquartered in Russia or with their principal place of business in Russia, "protecting New York from financing discrimination against the Ukrainian people". New York State Executive Order (herein, "Executive Order") No. 16 directs State Entities to refrain from entering into any new contract or renewing any existing contract with an Entity conducting business operations in Russia until such time as sanctions imposed by the federal government are no longer in effect.

For purposes of this certification, and as set forth in Executive Order No. 16, an "Entity conducting business operations in Russia" means "an institution or company, wherever located, conducting any commercial activity in Russia or transacting business with the Russian Government or with commercial entities headquartered in Russia or with their principal place of business in Russia in the form of contracting, sales, purchasing, investment, or any business partnership."

Notwithstanding the foregoing, an Affected State Entity may contract with an Entity conducting business operations in Russia provided that the head of the Affected State Entity makes a determination in writing that the investment or contract is necessary for the Affected State Entity to perform its functions and that no suitable investment or contractual alternatives exist.

In accordance with Executive Order No. 14 and Executive Order No. 16 (collectively, "the Executive Orders"), specific to the bid or proposal submitted for the above referenced contract or solicitation, and as evidenced by signature affixed hereto, Offeror/Bidder/Contractor /Consultant (or any assignee) certifies they: (1) are not an Entity conducting business operations in Russia, (2) are not conducting, will not conduct, and will not engage any such company that conducts, commercial activity with (a) the Russian Government, and (b) commercial entities headquartered in Russia or with their principal place of business in Russia, in the form of contracting, sales, purchasing, investment, or any business partnership.

Cattaraugus County reserves the right to reject any bid, proposal, grants, or request for assignment of any Offeror / Bidder / Contractor / Consultant, and to pursue a responsibility review with respect to any entity that is awarded a contract, if found to be in violation of this Certification or the Executive Orders.

Contractor [Name]: _____

By [signature]: _____

Name [print]: _____

Title: _____

Date: _____
(mm/dd/yyyy)

This certification must be signed by an authorized executive or legal representative

CATTARAUGUS COUNTY HEALTH DEPARTMENT

1 Leo Moss Drive, Olean, NY 14760, Tel. (716)701-3386, Fax (716) 701-3737

Public Health
Prevent. Promote. Protect.
Cattaraugus County Health Department
Established 1923

Kevin D. Watkins, M.D., MPH, *Public Health Director*

Robert W. Ring, PE
Environmental Health Director

RFP Date: XX XX, XXXX

CHANGE ORDER FORM

Date: _____ CO# _____

Project Address: _____

Contractor: _____

Original Total Project Cost: _____

Current Total Project Cost: _____

Net Change by Change Order: _____

Updated Total Project Cost: _____

Invoice Attached: ☐

Description of Work Change: _____

_____

Signature, Cattaraugus County: _____ Date: _____

Signature, Homeowner: _____ Date: _____

Signature, Contractor: _____ Date: _____

By signing the above form for additional services, all parties agree to the above contract price amendment, which may increase or decreases the previously agreed upon Total Project Cost.

CONTRACT FOR ABATEMENT OF LEAD BASED HAZARDS

This Agreement, made as of the ____ day of _____ in the year 202__ by and between _____ located at _____(hereinafter referred to as the "Contractor") and _____ located at _____(hereinafter referred to as the "Homeowner(s)" and "Responsible Entity") with Cattaraugus County (hereinafter referred to as the "County"), acting as an interested third parties. Collectively, the "Parties".

For all housing rehabilitation activities under this program, the Homeowner is considered the "Responsible Entity" for the purposes of procurement of contractor rehabilitation services and is therefore not subject to the requirements of 2 CFR Part 200.317-327. The County on behalf of the Homeowner, shall facilitate:

- Compiling bidder lists
- Developing a scope of work, technical specifications, and cost estimates
- Soliciting, receiving, and comparing bids
- Resolving disputes between the contractor and homeowner
- Any other administrative tasks that may arise during the term of assistance to that household

WITNESSETH that the Contractor, Homeowner and County in consideration of the mutual covenants hereinafter set forth, agree as follows:

ARTICLE 1 - Scope of the Work

The Contractor shall furnish all labor, materials, equipment, supervision and services to perform all the Work as shown in the Contract Documents for completion of the Project generally described as Abatement of Lead-Based Paint Hazards in Residential Housing at _____.

The Parties agree that there shall be no changes to the Contract or in the Scope of Work unless reduced to writing as a Change Order and executed as an Addendum to this Contract by the Parties.

ARTICLE 2 - Time of Commencement and Completion of Work

Time of beginning, rate of progress, and time of completion are essential conditions of the Contract. The Contractor agrees to commence the Work under this contract on the date stipulated in the written Notice to Proceed which shall be issued by the County and agreed upon by all Parties.

The Work shall commence and be completed by the Contractor between the stipulated dates. The Contractor may request a change of date of the Work in writing, as long as the work has not commenced and the request is received within ten (10 days) prior to the scheduled work date.

Consideration of any extra work or supplemental Contract work added to the original Contract as well as extenuating circumstances beyond the control of the Contractor, will be given due consideration by the County before assessing Liquidated Damages against the Contractor. The Contractor will be responsible for any delays resulting from causes within the Contractor's control, including inefficient operations. See Article 8 (N) regarding Liquidated Damages.

ARTICLE 3 – Notice to Proceed

The "Notice to Proceed" (see attached form) will stipulate the date on which it is expected the Contractor will begin the work. Commencement of work by the Contractor shall be deemed and taken as a waiver of this notice on his part. In no case, however, shall the Contractor begin work prior to the date of the signing of the Contract.

ARTICLE 4 - Contract Price

In consideration of the labor, material and services rendered under this Contract, the Homeowner or its representative shall pay the Contractor, subject to any additions and deductions, as provided in Article 1 of this Contract, the sum of _____upon the satisfactory completion of the Work.

ARTICLE 5 - Payment Schedule

The Homeowner or its representative shall make payments to the Contract as follows:

a. Upon request from the Contractor, the County will review and approve statements prepared by the Contractor for the total quantity of work properly completed by the Contractor as of a specified date noted on the statement. The County will pay the Contractor 95% of the amount of each statement, less prior payments, forty-five (45) days after approval of the statement. Neither statement nor payment shall mean that any Work is accepted. The statements should be based on the total quantities completed for each work item.

b. The 5% of the value of completed Work withheld from the Contractor will be paid to the Contractor by the Homeowner or its representative upon: (1) the completion of all Work to the satisfaction of the Risk Assessor and the County; and (2) A clearance examination is performed by a County Risk Assessor, satisfactory dust sample results are achieved, and Final Clearance has been issued for the home.

c. The acceptance by the Contractor of the final payment of amounts withheld from the statements shall be and shall operate as a release to the County and Homeowner of all claims and of all liability to the Contractor for all things done or furnished in connection with this Work and for every act and neglect of the County and others relating to or arising out of this Work.

d. The County reserves the right, at any time, to modify or change the Plans or Specifications as deemed necessary and the Agreement shall not be invalidated thereby however;

e. If the Contractor considers that he/she is being required to perform extra work for which no Change Order has been issued, then he/she shall serve Written Notice upon the County prior to such extra work is performed. On failure to serve this Notice, all rights of the Contractor to be paid therefore shall be forfeited.

ARTICLE 6 - Contract Documents

The Contract Documents consists of the LIRA, Instructions to Bidders, General Bid Specifications, Project Plans, Special Bid Specifications and Itemized Proposal which together with this Agreement and any Addendum to this Agreement, form the entire Contract between the Parties.

ARTICLE 7 – Contractor Representations

The Contractor is experienced in the use and interpretation of plans and specifications such as those included in these Contract Documents. He/She has carefully reviewed these and all of the Contract Documents and has found them free of ambiguity and sufficient for bid purposes. He/She has based his/her bid solely on these documents not relying on any explanation or interpretation, oral or written, from any other source.

ARTICLE 8 – Contract Provisions

The Parties to the attached contract, license, lease, amendment or other agreement of any kind (hereinafter, "the contract" or "this contract") agree to be bound by the following clauses which are hereby made a part of the contract (the word "Contractor" herein refers to any party other than the County of Cattaraugus, whether a contractor, licensor, licensee, lessor, lessee or any other party). In the event of a conflict between the terms of
the contract (including any and all attachments thereto and amendments thereof) and the terms of
this Article, the terms of this Article shall control.

A. Non-Assignment Clause: In accordance with Section 109 of the General Municipal Law, this contract may not be assigned by the Contractor, or its right, title or interest therein assigned, transferred, conveyed, sublet or otherwise disposed of without the previous consent, in writing, of the County and any attempts to assign the contract without the County's written consent are null and void.

B. Workers' Compensation Benefits: In accordance with Section 108 of the General Municipal Law, this contract shall be void and of no force and effect unless the Contractor shall provide and maintain coverage during the life of this contract for the benefit of such employees as are required to be covered by the provisions of the Workers' Compensation Law.

C. Non-Discrimination Requirements: In accordance with Article 15 of the Executive Law (also known as the Human Rights Law) and all other State and Federal statutory and constitutional non-discrimination provisions, the Contractor will not discriminate against any employee or applicant for employment because of race, creed, color, sex, national origin, age, disability or marital status. Furthermore, in accordance with Section 220-e of the Labor Law, if this is a contract for the construction, alteration or repair of any public building or public work or for the manufacture, sale or distribution of materials, equipment or supplies, and to the extent that this contract shall be performed within the State of New York, Contractor agrees that neither it nor its subcontractors shall, by reason of race, creed, color, disability, sex or national origin: (a) discriminate in hiring against any New York State citizen who is qualified and available to perform the work; or (b) discriminate against or intimidate any employee hired for the performance of work under this contract. If this is a building service contract as defined in Section 230 of the Labor Law, then, in accordance with Section 239 thereof, Contractor agrees that neither it nor its subcontractors shall, by reason of race, creed, color, national origin, age, sex or disability (a) discriminate in hiring against any New York State citizen who is qualified and available to perform the work; or (b) discriminate against or intimidate any employee hired for the performance of work under this contract. Contractor is subject to fines of $50.00 per person per day for any violation of Section 220-e or Section 239 as well as possible termination of this contract and forfeiture of all monies due hereunder for a second or subsequent violation.

D. Non-Collusive Bidding Requirement: In accordance with Section 103-d of the General Municipal Law, if this contract was awarded based upon the submission of bids, Contractor warrants, under penalty of perjury, that its bid was arrived at independently and without collusion aimed at restricting competition. Contractor further warrants that, at the time Contractor submitted its bid, an authorized and responsible person executed and delivered to the County a non-collusive bidding certification on Contractor's behalf.

E. Set-Off Rights: The County shall have all of its common law and statutory rights of set-off. These rights shall include, but not be limited to, the County's option to withhold for the purposes of set-off any monies due to the Contractor under this contract up to any amounts due and owing to the County with regard to this contract.

F. Record-Keeping Requirement: The Contractor shall establish and maintain complete and accurate books, records, documents, accounts and other evidence directly pertinent to performance under this contract for a period of three (3) years following final payment or the termination of this contract, whichever is later, and any extensions thereto. The County Treasurer or County Administrator or any

other person or entity authorized to conduct an examination, as well as the agency or agencies involved in this contract, shall have access to such books, records, documents, accounts and other evidential material during the contract term, extensions thereof and said such (6) year period thereafter for the purposes of inspection, auditing and copying. "Termination of this contract", shall mean the later of completion of the work of the contract or the end date of the term stated in the contract.

G. Governing Law: This contract shall be governed by the laws of the State of New York except where the Federal supremacy clause requires otherwise.

H. Postponement, Suspension, Abandonment or Termination of Contract: The County shall have the right to postpone, suspend, abandon or terminate this contract, and such actions shall in no event be deemed a breach of contract. In the event of any termination, postponement, delay, suspension or abandonment, the Contractor shall deliver to the County all data, reports, plans, or other documentation related to the performance of this contract, including but not limited to guarantees, warranties, as-built plans and shop drawings. In any of these events, the County shall make settlement with the Contractor upon an equitable basis as determined by the County which shall fix the value of the work which was performed by the Contractor prior to the postponement, suspension, abandonment or termination of this contract. This clause shall not apply to this contract if the contract contains other provisions applicable to postponement, suspension or termination of the contract.

I. Indemnification: The Contractor and Homeowner shall defend, indemnify, and save harmless against Cattaraugus County, its officers, employees, and representatives from all suits, actions, or claims of any character brought because of any injuries or damage received or sustained by any person, persons, or property on account of the operations or workmanship of such Contractor; or on account of or in consequence of any neglect in safeguarding the work; or through use of unacceptable materials in constructing the work; or because of any act of omission, neglect, or misconduct of the Contractor; or because of any claims or amounts recovered from any infringements of patent, trademark, or copyright; or from any claims on amounts arising or recovered under the Workers' Compensation Law, or any other law, ordinance, order, or decree; and so much of the money due the Contractor under and by virtue of his Contract as shall be considered necessary by the County for such purpose, may be retained for the use of the County; or, in case no money is due, his/her surety may be held until such suit or suits, action or actions, claim or claims for injuries or damages as aforesaid shall have been settled and suitable evidence to that effect furnished to the County; except that money due the Contractor will not be withheld when the Contractor produces satisfactory evidence that he/she is adequately protected by public liability and property damage insurance. The Contractor agrees to make no claim for damages for delay in the performance of this contract occasioned by any act or omission to act of the County, Homeowner, or any of its representatives, and the Contractor agrees that any such claim shall be fully compensated for by an extension of time to complete the performance of work as provided herein. This indemnification shall include all costs and disbursements incurred by the County in defending any suit, including attorney's fees.

J. Requests for Payment: All requests for payment by the Contractor must be submitted on forms supplied and approved by the County. Each payment request must contain such items of information and supporting documentation as required by the County, and shall be all inclusive for the period of time covered by the payment request.

K. Performance of Work Required: The Contractor agrees that during the performance of the work required pursuant to this Agreement, the Contractor and all officers, employees, agents or representatives working under the Contractor's direction shall strictly comply with all local, state or federal laws, ordinances, rules or regulations controlling or limiting in any way the performance of the work required by this Agreement. Furthermore, each and every provision of law required to be inserted in this Agreement shall be deemed so inserted, and the Agreement shall be read and enforced as if such provisions were so inserted.

The Contractor further agrees to insert in any subcontract hereunder, provisions which shall conform substantially to the language of this clause, including this paragraph.

L. Independent Contractor Status: It is understood that the Contractor is an independent Contractor and shall not be considered an agent of the County or Homeowner nor shall any of the Contractor's employees or agents be considered sub-agents for the County or Homeowner. The final contract will be between the Homeowner and the Contractor, and County as an interested third party, and is not intended and shall not be construed to create the relationship of agent, servant, employee, partnership, joint venture, or association. The employees and agents of one party are not the employees or agents of the other party for any purpose whatsoever. The Contractor understands and agrees that all persons performing work pursuant to the final contract are for purposes of workers' compensation liability, solely employees of the Contractor and not employees of the County. The Contractor shall be solely liable and responsible for furnishing any and all workers' compensation benefits to any person as a result of any injuries arising from or connected with any work performed by or on behalf of the Contractor hereunder. The employees and agents of each party shall while on the premises of the other party, comply with all rules and regulations of the premises including, but not limited to security requirements. The Contractor agrees to comply with the nondiscrimination employment policies as required by applicable state and federal laws and regulations regarding employment discrimination. The Contractor assures the County that in accordance with applicable law it does not, and agrees that it will not, discriminate in any manner on the basis of age, color, creed, national origin, race, religious belief, sexual preference, or handicap.

   In the event that the terms and conditions of the Agreement are not strictly enforced by the County, such non-enforcement shall not act as or be deemed to act as a waiver or modification of this Agreement, nor shall such non-enforcement prevent the County from enforcing each and every term of this Agreement thereafter.

M. Severability: If any provision of this Agreement is held invalid by a court of law, the remainder of this Agreement shall not be affected thereby if such remainder would then continue to conform to the laws of the State of New York.

N. Liquidated Damages The contractor shall be assessed a penalty of $250 for work not complete within the specified time frame, where Interim Clearance or Final Clearance is not achieved. The Contractor acknowledges the time for completion of the Work is reasonable, taking into consideration all facts and circumstances bearing upon the Work.

ARTICLE 9 – <u>Homeowner and Tenant Responsibilities</u>

a. The Homeowner and tenant shall permit the Contractor to use at no cost, existing utilities such as light, heat, power and water as necessary to carry out and complete the Work.

b. The Homeowner and tenant shall cooperate with the Contractor to facilitate the performance of the Work, including all items agreed upon in the Worksite Preparation Form.

c. The Homeowner and tenant shall allow the Contractor to work at the site during the contract period and agree not to reenter the home at any time until Interim Clearance or Final Clearance is achieved, and authorized to do so by the County.

d. The Homeowner and tenant shall permit the County or their designee, or the agents of other funding sources assisting in the financing of the Contract, to examine and inspect the rehabilitation work.

ARTICLE 10 - <u>Conflict of Interest</u>

a. The Contractor warrants that to the best of the Contractor's knowledge and belief, there are no relevant facts or circumstances which could give rise to an organizational conflict of interest, as herein defined, or that the Contractor has disclosed all such relevant information to the County.

b. An organizational conflict of interest exists when the nature of the work to be performed under this contract may, without some restriction on future activities, either result in an unfair competitive advantage to the Contractor or impair the Contractor's objectivity in performing the work for the County.

c. The Contractor agrees that if an actual or potential organizational conflict of interest is discovered after award, the Contractor will make a full disclosure in writing to the County. This disclosure shall include a description of actions which the Contractor has taken or proposes to take, after consultation with the County, to avoid, mitigate, or minimize the actual or potential conflict.

d. The County may terminate this contract in whole or in part, if it deems such termination necessary to avoid an organizational conflict of interest. If the Contractor was aware of a potential organizational conflict of interest prior to award, or discovered an actual or potential conflict after award and did not disclose or misrepresented relevant information to the County, then the County may terminate the contract, or pursue such other remedies as may be permitted by law or this contract. The terms of Clause (k) of this Section or other applicable contract provision regarding termination shall apply to termination by the County pursuant to this clause.

e. The Contractor further agrees to insert in any subcontract hereunder, provisions which shall conform to the language of this clause.

IN WITNESS WHEREOF, the parties hereto have executed this AGREEMENT the day and year first above written.

Attest _____

_____ By: _____
Homeowner

Attest_____

_____ By: _____
Contractor

Attest_____

_____ By: _____
County

ACKNOWLEDGMENT OF CONTRACTOR

STATE OF NEW YORK)SS
COUNTY OF CATTARAUGUS)

On this____day of 20_____, before me, the undersigned, a Notary Public in and for said State, personally appeared_____, personally known to me or proved to me on the basis of satisfactory evidence to be the individual whose name is subscribed to the within instrument and acknowledged to me that he/she executed the same in his/her capacity, and that by his/her signature on the instrument, the individual, or the person upon behalf of which the individual acted, executed the instrument.

_____
Notary Public (SEAL)

ACKNOWLEDGMENT OF HOMEOWNER

STATE OF NEW YORK)SS
COUNTY OF CATTARAUGUS)

On this_____day of_20_____, before me, the undersigned, a Notary Public in and for said State, personally appeared_____, personally known to me or proved to me on the basis of satisfactory evidence to be the individual(s) whose name(s) is subscribed to the within instrument and acknowledged to me that he/she/they executed the same in his/her/their capacity(ies), and that by his/her/their signature(s) on the instrument, the individual(s), or the person upon behalf of which the individual(s) acted, executed the instrument and that such individual made such appearance before the undersigned in the City/Town of _____in State of__.

_____
Notary Public (SEAL)

ACKNOWLEDGMENT OF COUNTY

STATE OF NEW YORK)SS
COUNTY OF CATTARAUGUS)

On this_____day of_20_____, before me, the undersigned, a Notary Public in and for said State, personally appeared_____, personally known to me or proved to me on the basis of satisfactory evidence to be the individual(s) whose name(s) is subscribed to the within instrument and acknowledged to me that he/she/they executed the same in his/her/their capacity(ies), and that by his/her/their signature(s) on the instrument, the individual(s), or the person upon behalf of which the individual(s) acted, executed the instrument.

_____
Notary Public (SEAL)